ORDINANCE NO. 1423

AN ORDINANCE OF THE MAYOR AND CITY COUNCIL OF THE CITY OF APACHE JUNCTION, ARIZONA, AMENDING APACHE JUNCTION CITY CODE, VOLUME II, LAND DEVELOPMENT CODE, BY REPEALING CHAPTER 10: ENGINEERING DESIGN GUIDELINES AND POLICIES IN ITS ENTIRETY; AND ADOPTING BY REFERENCE A NEW CHAPTER 10 AS MORE FULLY DETAILED IN THAT CERTAIN DOCUMENT ENTITLED "2016 AMENDMENTS TO THE APACHE JUNCTION CITY CODE, VOLUME II, CHAPTER 10: ENGINEERING STANDARDS"; REPEALING ANY CONFLICTING PROVISIONS; PROVIDING FOR SEVERABILITY; PROVIDING FOR PENALTIES; AND ESTABLISHING AN EFFECTIVE DATE.

WHEREAS, the mayor and city council on August 2, 1995 adopted the City of Apache Junction Engineering Guidelines by Ordinance No. 932; and

WHEREAS, the mayor and city council adopted Ordinance No. 1282 on November 7, 2006, repealing the existing guidelines and adopting a new chapter of the Apache Junction City Code, Volume II, LAND DEVELOPMENT CODE, entitled Land Development Code, Chapter 10, Engineering Design Guidelines and Policies; and

WHEREAS, it has been almost ten years since the last set of amendments and an update is overdue, especially in light of the development market forces and industry practices; and

WHEREAS, A.R.S. § 9-802 permits municipalities to enact the provisions of a code or public record theretofore in existence without setting forth such provisions in full text as long as the adopting ordinance is published in full text and at least one paper copy of the code changes or public record are filed in the office of the clerk of the municipality and one electronic copy is accessible on the city's website and made available for public inspection.

NOW, THEREFORE, BE IT ORDAINED BY THE MAYOR AND CITY COUNCIL OF THE CITY OF APACHE JUNCTION, ARIZONA, AS FOLLOWS:

SECTION I IN GENERAL

1. Existing Apache Junction City Code, Volume II, LAND DEVELOPMENT CODE, Chapter 10: Engineering Design Guidelines and Policies, is hereby repealed in its entirety.

2. That certain document containing the amended and new Chapter 10 code provisions relating to engineering standards, entitled "2016 Amendments to the Apache Junction City Code, Volume II, LAND DEVELOPMENT CODE, Chapter 10: Engineering Standards", one paper copy and one electronic copy which are accessible on the City's website and filed in the office of the city clerk, which document was made a public record by Resolution No. 16-04 of the City of Apache Junction, is hereby referred to, adopted and made a part hereof as if fully set out in this ordinance, pursuant to A.R.S. § 9-802.

SECTION II REPEALING ANY CONFLICTING PROVISIONS

All ordinances and parts of ordinances in conflict with the provisions of this ordinance or any part of the codes adopted herein by reference are hereby repealed.

SECTION III PROVIDING FOR SEVERABILITY

If any section, subsection, sentence, phrase, clause or portion of this ordinance or any part of the codes or regulations adopted herein by reference is for any reason held to be invalid or unconstitutional by the decision of any court of competent jurisdiction, such decision shall not affect the validity of the remaining portions thereof.

SECTION IV PROVIDING FOR PENALTIES

Any violation of the provisions adopted herein shall be punishable as a class one misdemeanor consistent with Apache Junction City Code, Volume I, Chapter 1: GENERAL, ARTICLE 1-1: GENERAL, § 1-1-11, PENALTY.

SECTION V ESTABLISHING AN EFFECTIVE DATE

The provisions of this ordinance shall take effect on July 1, 2016.

PASSED AND ADOPTED BY THE MAYOR AND CITY COUNCIL OF THE CITY OF APACHE JUNCTION, ARIZONA, THIS 19TH DAY OF APRIL, 2016.

SIGNED AND ATTESTED TO THIS 19TH DAY OF APRIL, 2016.

JOHN S. INSALACO

Mayor

ATTEST:

KATHLEEN CONNELLY
City Clerk

APPROVED AS TO FORM:

4-19-16

RICHARD J. STERN
City Attorney

CHAPTER 10: ENGINEERING STANDARDS

Article

10-1. INTRODUCTION

10-2. CONSTRUCTION PLAN REQUIREMENTS

10-3. STREET DESIGN AND CONSTRUCTION

10-4. STORMWATER MANAGEMENT

10-5. WATER

10-6. SEWER

10-7. SITE DEVELOPMENT

10-8. SUBDIVISION PLATS

10-9. AS-BUILT DRAWINGS

APPENDIX 10-A: DOWNTOWN AREA AND CCD (CENTRAL CITY ZONING DISTRICT)

APPENDIX 10-B: RURAL AREA

APPENDIX 10-C: LOST DUTCHMAN HEIGHTS

APPENDIX 10-D: STANDARD DETAILS

ARTICLE 10-1: INTRODUCTION

Section

10-1-1 Purpose of Engineering Standards
10-1-2 Sections
10-1-3 Intent
10-1-4 Policies related to development improvements
10-1-5 General information

§ 10-1-1 PURPOSE OF ENGINEERING STANDARDS.

The purpose of the Engineering Standards ("this Chapter" or "these Standards") is to provide both general information and specific design standards to inform developers and their designers of the planning and designing of public and private infrastructure within the City of Apache Junction. Design concepts and

specific technical data are outlined, but are not intended to supersede sound engineering judgment. All plans are to be prepared with these concepts in mind and will be reviewed accordingly. No attempt has been made in these standards to establish a complete set of design criteria; however, certain standards must be followed to provide consistency for the sake of maintenance, repair or replacement.

§ 10-1-2 SECTIONS.

(A) *Generally.* This Chapter is divided into individual sections and specially designated areas, which cover specific elements of the design and development review process. It begins with general information followed by specific technical details. Staff updates will be published and made available periodically on an as needed basis. The city engineer may provide a "Memorandum of Clarification" to portions of the standards on an as-required basis. Clarifications will posted on the city website and at the City Clerk's Office.

(B) *Specially designated areas.* The specially designated areas are included as individual separate elements of this Chapter and are as follows:

(1) *Downtown Area (A.J.C.C., Vol. II, Appendix 10-A).* The physical limits of the Downtown Area are shown on Apache Junction Standard Detail AJ-12.1.

(2) *Rural Area (A.J.C.C., Vol. II, Appendix 10-B).* The physical limits of the Rural Area are shown on Apache Junction Standard Detail AJ-12.1.

(3) *Lost Dutchman Heights (A.J.C.C., Vol. II, Appendix 10-C).* The physical limits of Lost Dutchman Heights are shown on Apache Junction Standard Detail AJ-12.1.

§ 10-1-3 INTENT.

These Engineering Standards are intended to be used in conjunction with the specifications of the land development, subdivision, zoning, floodplain, grading, landscaping and other appropriate ordinances of the city, and such other agencies as may have jurisdiction.

§ 10-1-4 GENERAL INFORMATION.

(A) All development within the city shall comply with all requirements of the city codes, ordinances, procedures, rules, regulations, guides and manuals. Copies of these documents, with revisions, are on file in the Apache Junction City Clerk's office. Preliminary and final design plans shall be prepared in accordance with these standards.

(B) All construction of public infrastructure shall be in accordance with the approved plans, the latest City of Apache Junction Engineering Standards (this Chapter), the Apache Junction Standard Details set forth in A.J.C.C., Vol. II, Appendix 10-D to this Chapter, the current *Uniform Standard Details* and *Uniform Standard Specifications* published by the Maricopa Association of Governments ("MAG"), the Arizona Department of Transportation ("ADOT"), American Water Works Association ("AWWA"), American Association of State Highway and Transportation Officials ("AASHTO"), American Public Works Association ("APWA"), Arizona Department of Environmental Quality ("ADEQ") and by the city as follows:

(1) *Conceptual site/improvement plans.*

(a) A developer may prepare and submit a conceptual site/improvement plan for purposes of discussion with the development services department and the public works department. The Preliminary Design Review process will provide general directions, comments and requirements, which may aid the developer in the production of his or her final plans. City staff will reserve specific directions, comments and requirements at the time of formal plans submission.

(b) In certain cases, such as projects with access off major thoroughfares, or projects located in areas of major drainage concerns/problems, a conceptual plan may be required in order for the development services department and the public works department to assess concerns and provide recommendations.

(2) *Horizontal and vertical control.*

(a) The developer's engineer shall prepare plans in conjunction with established and verified horizontal control available adjacent to the site, and with vertical datum as provided by the city.

(b) Benchmarks shall be clearly indicated on the cover sheet, and temporary benchmarks shall be clearly indicated on each plan/profile sheet of the improvement plans. All plans shall reference a minimum of two city benchmarks for horizontal control and a minimum of one benchmark for vertical control. Horizontal and vertical controls used for the project shall be identified on the cover sheet and shall include the basis of bearings, and the city benchmark numbers, description and latest elevation. The benchmarks shall be verified by the construction contractor during construction.

(c) All CAD drawings shall be referenced to a minimum of two known Maricopa County Department of Transportation ("MCDOT") Geodetic Densification and Cadastral Survey ("GDACS") control locations (section corners and/or quarter-section corners) and projected to the following national coordinate system:

1. Horizontal Coordinates:

- North American Datum ("NAD") 1983 High Accuracy Reference Network ("HARN")
- State Plane Arizona Central
- Unit of Measure – International Feet

2. Vertical Coordinates (if applicable):

- North American Vertical Datum of 1988 ("NAVD88")

(3) *Right-of-way.* The acquisition and dedication of new street right-of-way and/or easements (utility, drainage and the like) shall be determined and coordinated through the city. Deeds containing legal descriptions and accompanying exhibits for these rights-of-way, easements, tracts and/or parcels used to dedicate or cause to be dedicated to the city shall be prepared and sealed in accordance with the requirements of the Arizona State Board of Technical Registration and submitted to the city for approval and recordation prior to final plan approval.

(4) *Street lights.* Street lights are required on all public streets within or adjacent to the proposed development per city regulations. Plans for these facilities must be included in the overall submittal. Street lights are not required in the specially designated Rural Area.

(5) *Utilities.*

(a) All utility designs must be in accordance with city standards, utility company standards, the latest State and County Health Department requirements, and approved by each respective agency prior to the issuance of city permits. The developer shall:

1. Coordinate the plans with all of the appropriate utility companies; and

2. Place a "utility coordination block" on the cover sheet showing the names of the utility companies, and the date plans were submitted to each company or agency.

(b) Utilities for new development shall be placed underground in accordance with A.J.C.C., Vol. II, Chapter 6, Landscaping.

(c) Existing and proposed locations must be shown on plans to reduce the possibility of conflict and damage. Correcting conflicts shall be the responsibility of the developer. All relocation costs must be borne by the developer.

(d) In the case of large projects where the improvements cannot be shown on one (1) plan sheet, the plans must include a general Master Utility Plan for the development. This Master Utility Plan shall appear on one (1) sheet and be included with the improvement plan set. The Master Utility Plan shall include proposed street light locations.

(6) *Soils report.* The developer shall provide a soils investigation report for each project. Areas of unsuitable soil and areas that have large shrink and swell potential, as well as areas of subsidence or fissures, will require special treatment during project construction. The developer's engineer shall note these areas and special treatment requirements from the soils report on the plans. The report shall investigate soil conditions for structural thickness for all streets, percolation rates for dry wells or retention basins, building foundation allowable loads, and retaining wall allowable loads.

(7) *Plan review.*

(a) Once the plans for the development have been prepared, they shall be submitted to the development services department with the appropriate development and review fees. Once submitted, they will be distributed to the appropriate city departments and Fire District for their review and comment. These comments will be compiled and consolidated by the Apache Junction development services department and returned to the developer. All such comments shall be incorporated into the plans and reports by the developer for resubmittal.

(b) Water plans that are in the Arizona Water Company's jurisdiction will be submitted to Arizona Water Company for its review and approval.

(c) Water plans that are in the Apache Junction Water District's jurisdiction will be submitted to Apache Junction Water District for its review and approval.

(d) Sewer plans shall be submitted to Superstition Mountains Community Facilities District No. 1 for its review and approval.

(8) *Plan approval.*

(a) Final plan approval is required prior to the start of construction. Plans are considered approved when all appropriate sign-offs have been obtained.

(b) Plan approval is valid for 1 year from date of approval.

(c) If construction is not started within 1 year of the issuance of permit, the plans must be resubmitted for review and re-approval, and the appropriate fees must be re-paid. The updated plans will be subject to review under the code in force at the time of the new review.

(9) *Construction.*

(a) Construction permits are required for each phase of each type of construction activity within the city. Any contractor found working on a project without an official set of approved plans and permits shall discontinue work and if they do not is subject to a stop work order issued by the city engineer or City Building Official. Prior to the issuance of a permit, the developer shall provide the appropriate assurance of construction for the off-site improvements per city regulations.

(b) The city's review of all NPDES submittals including NOI, NOT and SWPPP is intended as review only and does not constitute approval of the methods or plans for cleaning the stormwater and protecting the waters of the United States. The contractor is solely responsible for insuring that all requirements of the Clean Water Act are strictly enforced.

(10) *Preliminary and final plat.* Preliminary and final plat requirements, see A.J.C.C., Vol. II, Article 10-8 of this Chapter.

(C) *Electronic Submittal Requirements*

(1) Approval Submittal:

(a) Final Plat, Subdivision and Site Improvement Plans:

CD/DVD containing complete final plat and improvement plan base file(s) in AutoCad DWG format (all X-REF files to be inserted into each DWG file) and PDF images of each plan sheet i.e. the signature set. The PDF files will be named the same as the construction plan sheets (i.e. C1.pdf, 100.pdf, etc.).

(b) Geospatial Data:

Data can also be delivered in a GIS format such as a shapefile ("SHP") or geodatabase.

(2) Revised Plan Approval Submittal:

(a) Final Plat, Subdivision and Site Improvement Plans:

CD/DVD containing complete REVISED final plat and improvement plan base file(s) in AutoCad DWG format and PDF images of REVISED plan package, 8-1/2x11 minor revision sheet, etc. with approval submittal. The PDF files will be named the same as the construction plan sheets (i.e. C1.pdf, 100.pdf, etc.).

(b) Geospatial Data:

Data can also be delivered in a GIS format such as a shapefile ("SHP") or geodatabase.

§ 10-1-5 POLICIES RELATED TO DEVELOPMENT IMPROVEMENTS.

The following sections outline the city's policies related to various improvements associated with the development process. They are by nature general in scope. Reference should be made to the appropriate sections within the balance of these standards for specific details.

(A) *Street improvement policy.*

(1) All developments within the city shall provide an interior street system adequate to ensure that all parcels and/or facilities within the development shall have reasonable access to the balance of the public street system. Further, they shall provide access into the development for public service and/or emergency operations. Such facilities shall be of such width and structural strength as to provide safe and unrestricted access.

(2) In single-family developments it is the intent of the city that the street system be designed in conformance with current street classifications. There shall be minimal direct access to the collectors, secondary streets, and extremely limited access to the arterials.

(3) When the development occurs adjacent to a boundary street, it is the city's policy that it shall be the responsibility of the developer to install improvements along their frontage to the ultimate grade and alignment for that boundary street. This may include removal and replacement of the existing street surface to the centerline if that structure is inadequate to meet the current design standards. Concrete curb and gutter, concrete sidewalk, street lighting, landscaping, irrigation and burial of overhead utilities will be required, at the sole or substantial expense of the developer.

(B) *Storm drainage policy.*

(1) It is the city's policy that all developments within the city shall provide sufficient retention/detention so as to minimize the adverse impact of that development on its downstream neighbors. To that end, all development shall provide sufficient on-site retention/detention to contain, at the least, the runoff generated by storm event falling on that property (see A.J.C.C., Vol. II, § 10-4-2(A)(1) and (2)). Such retention/detention facilities shall be separate and distinct tracts or drainage easements within the development and shall be planned for accordingly.

(2) Further, it is the city's policy that all developments shall provide adequate drainage facilities so as to convey runoff, generated both on and off the project, around or through the project in such a manner as to ensure that the structures will be free from flooding and that there is reasonable access for emergency and public service vehicles. The developer shall install storm sewers, channels and/or other physical improvements necessary to achieve this result.

(3) The *Drainage Design Manual for Maricopa County*; Volume I, *Hydrology,* shall be used to determine peak discharge volumes for design purposes, and Volume II, *Hydraulics* is to be utilized as a basis for design guidance and criteria.

(4) When washes cross a property, an erosion hazard setback from the edges of the wash(es) will be determined by the development services department and no buildings will be constructed within the setback without industry acceptable erosion hazard setback mitigation techniques and structures.

(C) *Water line extension policy.* It is the city's policy that all development within the city shall have an adequate and secure source of potable water. Therefore, unless specifically excepted in writing by the Apache Junction Water Utilities Community Facilities District ("WUCFD") or the Apache Junction Water District ("AJWD"), all developments within the city shall be serviced by AJWD or Arizona Water Company. Further, the developer shall extend the system to and through the development as necessary to ensure adequate supply to the development. If deemed necessary and appropriate, the developer shall extend the water distribution system to the extremities of the project so as to ensure that more distant potential users shall have reasonable access to the potable water source.

(D) *Sewer line extension policy.* It is the city's policy that, unless specifically excepted in writing by the Superstition Mountains Community Facilities District No. 1 ("SMCFD"), all developments within the city shall provide for the discharge of domestic and other liquid waste into the sewage system provided by SMCFD. All developers shall be required to extend to and through their project a sewage collection system of a size sufficient to dispose of these wastes to the SMCFD's system. When deemed appropriate and necessary, the developer shall extend the main trunk and/or collector lines to the upstream extremities of the project so as to provide reasonable access for potential upstream users to the SMCFD's sewage system. Owners of developments outside the city limis but within the CAG 208 Plan boundaries must annex into the city and enter into a development agreement to do so which is binding to successors in interest.

(E) *Site development policy.* It is the city's policy that all development within the city shall be designed and constructed in such manner as to provide a safe and pleasant environment for the current and future citizens of Apache Junction. To that end, the appropriate standards have been established for site development, to include: public and/or private access for general and special uses; water and sewage systems; on-site and off-site drainage; irrigation; landscaping; storm retention; street lighting, traffic control and public utilities as may be required. The structures themselves are to be constructed in accordance with the Subdivision Regulations (A.J.C.C. Vol. II, Chapter 2) and/or Zoning Ordinance (A.J.C.C., Vol. II, Chapter 1), the current adopted International Building Code, Standard Specifications, and these standards, as appropriate.

(F) *Order of precedence.* It is not intended by these standards to repeal, abrogate, annul or in any way impair or interfere with existing provisions of other laws or ordinances except those specifically repealed with private agreement, or with restrictive covenants running with the land to which the city is a party. Where these standards impose a greater restriction on land, buildings or structures than is imposed or required by such existing provisions of law, ordinance, contract or deed, the provisions of these standards shall prevail.

(G) *Definitions and abbreviations.* The words, abbreviations or phrases used in these standards may be found in the Maricopa Association of Governments *Uniform Standard Specifications for Public Works Construction* (Standard Specifications) and *Uniform Standard Details for Public Works Construction* (Standard Details). All other words or phrases shall be per the generally accepted meaning of the English language.

ARTICLE 10-2: CONSTRUCTION PLAN REQUIREMENTS

Section

10-2-1 General comments
10-2-2 Plan submittal sequence
10-2-3 Redline comments
10-2-4 Approval of plans
10-2-5 Basic plan requirements
10-2-6 Cover sheet
10-2-7 Detail sheet
10-2-8 Reports and other documents
10-2-9 Special plan requirements
10-2-10 Plan view only sheets
10-2-11 Plan and profile sheets
10-2-12 General construction notes
10-2-13 Street construction notes
10-2-14 Grading and drainage construction notes
10-2-15 Water main construction notes
10-2-16 Sewer construction notes
10-2-17 Civil Engineering Plan review checklist
Appendix 10-2A: Typical Approval Blocks (Figure 2)

§ 10-2-1 GENERAL COMMENTS.

(A) This chapter contains information to assist the consultant in the preparation of all construction plans and documents to be submitted to the city for approval.

(B) All plans shall conform to the latest revised copy of the city's Engineering Standards (this Chapter) and Apache Junction Standard Details set forth in A.J.C.C., Vol. II, Appendix 10-D to this Chapter.

(C) Any deviation from this Chapter requires prior approval by the city engineer.

(D) All construction plans for grading and drainage, streets, water, sewer and storm drains shall be prepared per the standards set forth in these standards and Standard Details.

(E) If any plan submitted is not in compliance with these standards, or has in the plan reviewer's opinion excessive corrections, the review may not continue and will be returned to the owner. Any plan submitted for review, even if discontinued, will be counted as a plan review submittal.

(F) All plans and reports shall be accompanied by a completed Checklist for Engineering Plan Review as set forth in A.J.C.C., Vol. II, § 10-2-17 and city engineering Plan Review Fee Schedule, as set forth in A.J.C.C., Vol. I, Chapter 4, Fees.

(G) Two (2) sets of drainage reports, grading and drainage, paving and storm drain plans, Storm Water Pollution Prevention Plan ("SWPPP"), and six (6) sets of commercial and all other development plans with off-site improvements along perimeter streets are required for each submittal to the city's development

services department. Plan construction documents shall also be submitted in PDF electronics file format. The corresponding number of sets of plans and city redlines are required for all subsequent submittals.

(H) When final plans are submitted for approval signatures, a CD of the electronic CAD files of the construction plan sheets shall also be submitted per § 10-1.5(C). Each sheet file shall not contain any X-reference files which shall be "inserted" into the drawing file.

(I) Submittals of water and sewer plans shall be made directly to the utility companies and there must be verification by the developer of submittal requirements with each respective utility company.

§ 10-2-2 PLAN SUBMITTAL DOCUMENTS.

(A) Site plan (site, drainage, water, sewer plans and others as requested by city). An approved site plan shall be included in or submitted with a drainage report and/or grading and drainage plan.

(B) The following may be submitted simultaneously:

(1) Drainage report;

(2) Grading and drainage plan;

(3) Paving plan (including striping plan and soils report);

(4) Storm drain plan;

(5) Sewer plan to the sewer district and city;

(6) Water plan to the water company/water district and city;

(7) Storm Water Pollution Prevention Plan ("SWPPP");

(8) Street lights plan;

(9) Traffic signal installation plan if applicable; and

(10) Dry utilities plan.

§ 10-2-3 REDLINE COMMENTS.

All plan review and city redline comments must be corrected or clarified. If there is a discrepancy concerning a redline comment, plan review staff should be notified. The redline set of plans shall be returned with the next plan submittal. Changes made to the plans or report, other than corrections noted in the city's redlines, shall be listed in detail with the location in plans clearly stated. Failure to identify additional changes shall result in return of plans and an additional review shall be required.

§ 10-2-4 APPROVAL OF PLANS.

(A) When the plans meet the requirements for approval, the original Mylar cover sheet will be requested. The original (4 mil) Mylar cover sheet and 7 full sets of plans on bond paper shall be submitted for signature. Prior to city signature, all other reviewing agencies shall have signed the cover sheet. If an agency does not sign the cover, a letter of its approval shall accompany the cover sheet and the letter date and signing party will be noted on the cover sheet.

(B) Any approvals or permits by the city shall not constitue authorization, approval or acceptance that the developer has complied with all federal, state, or county rules, regulations and requirements. The developer is responsible for obtaining and shall comply with all federal, state and county approvals, authorizations and permits, including but not limited to the following:

(1) Clean Water Act (Section 404)

(2) Air Quality Permits: Dust, Industrial, and Small Operations

(3) National Historic Preservation Act & Archaeology

(4) Environmental Compliance Permits

(C) A CD/DVD of the electronic files per § 10-1-5(C) for the AutoCAD drawings shall also be submitted at this time. AutoCAD drawing files shall not contain X-reference files within them. All X-referenced files shall be "inserted" into each drawing, such that there are no X-referenced files associated with an AutoCAD base file drawing. The plan files shall also be submitted in PDF format on the same CD/DVD per § 10-1-5(C).

§ 10-2-5 BASIC PLAN REQUIREMENTS.

General submittal standards:

(A) Plans shall be prepared on a 24-inch by 36-inch sheet size, with a minimum two-inch left border and minimum 1/2-inch border on all other sides. Plan sets of differing sizes need to be assembled according to size.

(B) Plans submitted for review shall have the appropriate professional (State of Arizona) seal, signature, and date on each sheet in accordance with the requirements of the Arizona State Board of Technical Registration.

(C) All infrastructure improvements (e.g., water, sewer, grading) shall be submitted on separate sheets. Exceptions to this are:

(1) Storm drain and paving may be on the same sheet (separate fees apply for each utility); and

(2) Water and sewer may be on the same sheet (separate fees apply for each utility).

(D) (1) All improvement plans submitted for review shall be to a scale that allows the information to be clearly read and easily understood. The city may use 50% reduced copies of improvement plans; and should be taken into account when selecting drawing scales, line weights and lettering sizes.

(2) The following are standard drawing scales to be used for construction documents submitted to the city. The development services department may consider the use of other scales on a case-by-case basis.

Drawing Scales - General Standards	
Type of Sheet	***Scale***
Plan and profile showing public street improvements (curb, gutter and sidewalk)	1 in. = 20 ft. horizontal
	1 in. = 2 ft. vertical
Single utility installation (water, natural gas or sanitary sewer)	1 in. = 20 ft., 30 ft. or 40 ft. horizontal
Double utility installation (water, natural gas or sanitary sewer)	1 in. = 20 ft., 30 ft. or 40 ft. horizontal
Combination of public street and utilities	1 in. = 20 ft. horizontal
	1 in. = 2 ft. vertical
Grading and drainage plans	1 in. = 20 ft., 30 ft. or 40 ft. horizontal
Master Utility Plan	1 in. = 100 ft.
Landscape Plans for publicly maintained areas	1 in. = 20 ft., 30 ft. or 40 ft. horizontal
Public street lighting or traffic signals	1 in. = 20 ft. horizontal

(E) The city requires that all "Preliminary - Not For Recording or Construction" statements be removed from all plans, plats, maps or dedication prior to plan approval or recording.

(F) Minimum lettering and numbering size shall be 3/16 inch for manually drafted or 1/8 (0.125) inch for mechanically produced letters, numbers and symbols. Lettering, numbering and line work must be uniform, with clear definition and in black ink.

(G) Plans shall be of a quality to allow line weight and letter size to be easily read when reduced by 50%. NOTE: Plans which in the opinion of city staff cannot produce usable 50% reductions will not be accepted for review.

(I) Plans shall be drawn with the drafting symbols presented in Maricopa Association of Governments *Uniform Standard Details for Public Works Construction.*

(J) Plans submitted to the city for review shall be blueline or blackline prints.

(K) Plans submitted to the city for approval shall be original Mylar (4 mil) drawings or photo Mylar (4 mil) copies of original drawings.

(L) A Master Utility Plan at 1 inch = 100 feet shall be submitted with the final construction plans if the development services department requires one. This plan will also be updated with the as-built drawings.

(M) Incomplete submittal may result in rejection (e.g., nonconformance with this chapter). The rejection of plans may count as a review. The next submittal may require payment of additional review fees.

§ 10-2-6 COVER SHEET.

(A) For improvement plans cover sheet format and information, the engineering division of the public works department should be contacted.

(B) An individual cover sheet with the following information is required for each type of single improvement plan. Only one (1) cover sheet is required for construction plan sets that have more than one type of improvement. That can include paving, grading and drainage, water, sewer, street lighting and traffic signals.

(1) Project name and description;

(2) City name: Below the title include the words "Apache Junction, Arizona";

(3) Owner/developer's name, address and telephone number;

(4) Consultant/architect's name, address and telephone number;

(5) Engineer's seal, signature and date (this is to be affixed on each sheet);

(6) Vicinity map showing the project's location within the city limits;

(7) Legal description: Provide project property legal description. When a legal description is not feasible, the township, range, section and location shall be listed;

(8) Project benchmark: Approved city benchmarks shall be listed indicating benchmark number, description, location and latest city elevation datum per § 10-1-4(B)(2). Any project datum (temporary or permanent) used for the project shall be tied vertically to a city vertical control benchmark; and

(9) Additional information: The following additional information shall be included on the cover sheet. Contact the engineering division of the public works department for electronic CAD files of standard cover sheet and notes sheets:

(a) Blocks for city approval signatures;

(b) City of Apache Junction, General Construction Notes (A.J.C.C., Vol. II, § 10-2-12) (may be put on a separate note or detail sheet);

(c) A key-map shall be provided on multi-sheet plans to relate plan sheets to project locations and type of improvements. A standard scale of all maps must be sufficient to show all required information clearly (e.g., valves, fire hydrant, manholes, street signs and drainage arrows). This may be shown on a detail sheet instead of the cover sheet;

(d) Sheet index;

(e) Estimate of quantities (for work in public rights-of-way or public easements) with construction items shown in units as required in the right-of-way permit fee schedule shall be required. If the project is to be developed in phases, the estimate of quantities shall indicate quantities for each phase. A detailed, certified cost estimate shall be submitted for approval by the city;

(f) Utility system ownership approval area shall be listed. If a letter of conditional approval is received, a copy shall be submitted to the development services department with the reviewer's name and space for a date in the approval block;

(g) Other agency approvals shall be listed (e.g., State and/or County Health Departments, Fire District, Sewer District, Flood Control District);

(h) The zoning description as it currently exists on the property shall be listed;

(i) A legend for symbols, non-standard abbreviations and the like may be shown on a separate note or detail sheet;

(j) A "Blue-Stake" note is required on all plans which include excavation of any type as well as cover sheet,

(k) A list of all affected utility companies and all dates any plans were submitted for their review shall be shown; and

(l) An "As-Built" certification block shall be shown.

§ 10-2-7 DETAIL SHEET.

(A) A separate detail sheet may be provided at the discretion of the consultant or when required by the city.

(B) The following information is required:

(1) Construction notes (A.J.C.C., Vol. II, §§ 10-2-12 through 10-2-16);

(2) A typical cross-section for each street in the street construction plans. The information required on a typical section is:

(a) Dimensions;

(b) Street centerline and right-of-way line;

(c) MAG and Apache Junction Standard Details and Specifications;

(d) Pavement structural design;

(e) Trim and match to existing street; and

(f) Existing and proposed utilities.

(3) Special construction details as required shall be provided, to include:

(a) Modification or relocation detail for existing structures;

(b) Special construction required where utility locations conflict; and

(c) Others determined by the consultant and/or the city to clarify construction design as well as construction information.

(C) General plan information:

(1) Plan layout, graphics and call-outs must be clearly presented in an uncluttered manner acceptable to the development services project engineer;

(2) Call-out shall be boxed numeric style call-outs. Each number shall relate to the same topic for the entire set of plans. Narrative call-outs shall be grouped and clearly shown on every page that the call-out is used. Stationing and offset shall accompany every applicable call-out number;

(3) Plans may show only 1 utility (e.g., water, sewer, storm drain, grading and drainage, or paving) on the plans at a time, in bold, for review. All other infrastructure, existing and future, shall be shown lighter (smaller pen width or dashed). Exceptions to this are:

(a) Storm drain and paving may be on the same sheet (separate fees apply for each utility).

(b) Water and sewer may be on the same sheet (separate fees apply for each utility).

(4) Plans shall provide cross-referencing between all sheets which have details, detail call-outs, notes, and the like; and

(5) Plans shall be oriented with north at the top or right side of each sheet whenever possible. A north arrow and bar scale shall be provided.

§ 10-2-8 REPORTS AND OTHER DOCUMENTS.

Reports and other submitted documents shall include the following:

(A) All reports and documents shall have the appropriate (State of Arizona) professional seal, signature and date; and

(B) All reports and documents shall be provided on 8-1/2-inch by 11-inch format. Only typed reports are allowed. Larger size exhibits may be included, provided they are secured inside.

§ 10-2-9 SPECIAL PLAN REQUIREMENTS.

For traffic control plans, the city engineer shall stipulate, review and approve all traffic control plans for construction. An approved traffic control plan shall be required prior to any traffic control device installation within the public right-of-way.

§ 10-2-10 PLAN VIEW ONLY SHEETS.

(A) Plan view only is allowed for construction plans for:

(1) Grading and drainage plans with supplemental cross-sections as needed to explain drainage;

(2) Water line plans for new subdivisions with pipe size under 12 inches in diameter;

(3) Street light plans; and

(4) Traffic signal plans.

(B) The following information is required:

(1) Orientation such that north is either to the top or the right side of the sheet for each plan view;

(2) The drawing scale (see A.J.C.C., Vol. II, § 10-2-5(D)) indicating each plan view, and a graphic scale at least two inches long or 100 scale placed adjacent to each north arrow;

(3) All existing topography to include, but not be limited to:

(a) Existing contours with adequate spot elevations showing drainage;

(b) Existing utilities, aerial and underground, including services, manholes, valves, vaults, risers and miscellaneous utility items;

(c) Existing irrigation facilities;

(d) Adjacent land uses;

(e) City limits where applicable;

(f) One hundred-year floodplain limits where applicable;

(g) One hundred-year floodway limits where applicable;

(h) Existing storm drains, manholes, catch basins, retention/detention ponds and other miscellaneous drainage items;

(i) Direction of existing drainage flow with flow arrows; and

(j) Miscellaneous items of construction.

(4) Existing and proposed right-of-way, easements, corner triangles and property lines with accurate dimensions;

(5) Pinal County Tax Assessor's parcel numbers for surrounding properties;

(6) Existing topography in lighter imaging than new construction;

(7) Drafting and lettering of new construction shall be sufficiently heavier (darker) than existing topography so as to allow it to be quickly and clearly identified;

(8) New construction notes shall be heavier (darker) than the general information notes so that they contrast;

(9) New drainage slopes shown as a percentage of slope or in foot per foot change of grade;

(10) Grade breaks;

(11) "Blue-Stake" (a.k.a. "Arizona 811) notes on each sheet; and

(12) Engineer's seal (State of Arizona), signature and date shall be affixed on each sheet.

§ 10-2-11 PLAN AND PROFILE SHEETS.

(A) Plan and profile are required for the following construction plans:

(1) All arterial and secondary collector streets plus other streets when longitudinally matching existing streets;

(2) Water line plans within existing streets;

(3) Water line plans with pipe size 12 inches in diameter or greater;

(4) All storm drain pipe plans;

(5) All sewer line plans; and

(6) All effluent line plans.

(B) The following information is required:

(1) Plan view prepared in accordance with A.J.C.C., Vol. II, § 10-2-10;

(2) Profile view to the scale noted in A.J.C.C., Vol. II, § 10-2-5(D) depicting the following:

(a) Elevation and stationing grid;

(b) Profile of existing surface over proposed construction;

(c) Existing utility crossings; and

(d) Proposed construction (e.g., elevations, slopes and grade breaks).

(3) New construction notes shall be heavier (darker) than the general information notes so that they contrast; and

(4) Where the sanitary sewer is approved to be less than 5 feet deep, the proposed water line shall be indicated in profile by a "ghost" line, and the building sewers shall be plotted at the locations and inverts where they cross the water line. The MAG Standard Detail 404 shall be called out and shown, when needed, on both plan and profile.

(C) Double plan and profile shall only be permitted with written approval for the development services project engineer.

§ 10-2-12 GENERAL CONSTRUCTION NOTES.

All plans for construction within city right-of-way or easements shall have the following notes shown on either the cover, note or detail sheet.

"CITY OF APACHE JUNCTION
GENERAL CONSTRUCTION NOTES"

(A) "All work and materials within the public right-of-way shall conform to the latest editions of the Maricopa Association of Governments ("MAG") *Uniform Standard Specifications, Uniform Standard Details for Public Works Construction,* supplements as amended by the city or MAG, and by the Apache Junction Engineering Standards and Standard Details. A 1-year warranty period shall commence only after final acceptance by the city engineer or his or her designee."

(B) "All work and materials which do not conform to the approved plans and specifications are subject to removal and replacement at the contractor's expense."

(C) "All contractors and subcontractors shall obtain a city business license and necessary encroachment permits prior to beginning construction in the public right-of-way."

(D) "Contractor must notify the city engineer, school districts and emergency services providers 48 hours before restricting traffic on any city street."

(E) "The city engineer shall be notified two work days prior to commencing work within public rights-of-way. The contractor shall comply with the provisions for traffic controls and barricading as specified in the city's *Traffic Barricade Manual* and the latest version of the *Manual on Uniform Traffic Control Devices.* Developer/contractor shall be solely responsible for erecting, placing and maintaining all temporary and permanent signing and striping."

(F) "All improvements within public right-of-way shall be inspected by the city engineer or his or her designee who will be notified a minimum of 24 hours before any inspection is needed."

(G) "The city engineer may direct the placement or disposal of soil materials taken from the public right-of-way during pregrading."

(H) "It shall be the contractor's responsibility to call for Blue Stake, locate and protect all utilities and their appurtenances."

(I) "At least 2 but not more than 5 working days prior to excavating in the vicinity of any utility, the contractor shall contact the utility's locating service for field assistance."

(J) "Dust generated by construction activities shall be controlled by watering per Pinal County Air Quality Control District. Contractor shall obtain necessary permits from the Pinal County Air Quality Control District and shall provide a copy to the city engineer prior to watering."

(K) "All temporary utilities shall be obtained and handled by the contractor at his or her own expense. The contractor shall arrange to procure and transport water to the construction site. All temporary facilities and debris shall be removed prior to final acceptance by the city."

(L) "Existing utilities shall be relocated as required by the city. Overhead utility lines that must be relocated shall be placed underground at their own cost."

(M) "The developer shall arrange for the required utility relocations and bear the costs of the relocations. The developer shall provide affected utility companies and districts with advance notice of the proposed construction giving sufficient time for utility review."

(N) "City is not liable for delays or any damages to utilities related to this construction nor will the city participate in the cost of utility construction or relocation."

(O) "Frames, covers, valve boxes and manholes within public rights-of-way pavement shall be lowered to not higher than subgrade, plated and the ABC and AC constructed. After the AC is placed, the AC shall be sawcut and the lowered frames, covers and manholes shall be adjusted to grade and concrete collared per MAG Standard Details 420-1, 420-2, 426, 520, 521 and 522 for manholes and MAG Standard Detail 391-1 for valves."

(P) "Only water company employees are authorized to operate the water valves and fire hydrants on their water system."

(Q) "Traffic signal activity that includes relocation, re-construction or any improvements that involve turning off the signal or other related activity must be coordinated with the city engineer in advance."

(R) "The development services project engineer shall approve final plans after all other reviewing agencies have signed the originals. A developer shall submit the Mylar cover sheet for approval signature."

(S) "Deviations from the approved plans must be approved by the development services project engineer prior to construction. Any such changes shall be documented on all as-built plans."

(T) "City's plan approval is for 1 year only. If construction work is not started within 1 year and actively pursued to completion, the plans shall be brought up to current standards and resubmitted for city approval. The city's review of all NPDES submittals including NOI, NOT and SWPPP is intended as review only and does not constitute approval of the methods or plans for cleaning the stormwater and protecting the waters of the United States. The contractor is solely responsible for insuring that all requirements of the Clean Water Act are strictly enforced."

(U) "The acceptance of the completed rights-of-way improvements within a new subdivision will not be given until all deficiencies are corrected, test reports meeting MAG Specifications for compaction and materials are submitted, the warranty bond is posted, and other data including as-built drawings are provided to the city engineer."

§ 10-2-13 STREET CONSTRUCTION NOTES.

"CITY OF APACHE JUNCTION
STREET CONSTRUCTION NOTES"

(A) "Exact point of matching termination and overlay of existing street pavement shall be confirmed in the field by the city."

(B) "Driveway locations shall be confirmed or approved by the city prior to curb construction. The developer shall be responsible for coordinating the locations for driveways to avoid conflict with utility services."

(C) "Curb, gutter, sidewalk and pavement shall be swept clean of dirt and debris. New sidewalk shall be cleaned and kept clean during construction if pedestrian traffic is allowed on the sidewalk."

(D) "Gutters shall be water tested in the presence of the city engineer or designee, to ensure proper drainage prior to acceptance."

(E) "Contractor shall continuously reference location of all valves and manholes during construction."

(F) "All underground utilities located in the roadway shall be completed before paving."

(G) "Base course shall not be placed until subgrade has been approved by the city engineer. Pavement course shall not be placed until base course has been approved by the city engineer."

(H) "As-built drawings, certified by the subdivider's engineer, shall be submitted to and accepted by the city engineer before final acceptance of the work (see As-Built Requirements set forth in A.J.C.C., Vol. II, Article 10-9)."

§ 10-2-14 GRADING AND DRAINAGE CONSTRUCTION NOTES.

Plans for grading and drainage construction shall have the following notes shown on either the cover, note or detail sheet.

CITY OF APACHE JUNCTION
GRADING AND DRAINAGE
CONSTRUCTION NOTES

(A) "An on-site excavation and grading permit is required."

(B) "A separate encroachment permit is necessary for any off-site construction."

(C) "The city shall be notified 24 hours before any off-site construction begins."

(D) "Staking pad and/or finished floor elevations are the responsibility of the developer or his or her engineer."

(E) "In a Federal Emergency Management Agency ("FEMA") Special Flood Hazard Area (FEMA Zones A, AE, AO, AH) a FEMA Elevation Certificate of the finished building floor shall be submitted at time of plan review (pre-construction elevation certificate) and with the as-built plans (post-construction elevation certificate). In non-critical drainage areas, the developer's engineer shall submit certifications of constructed building pad elevations prior to the city's acceptance of project."

(F) "The grading contractor shall designate the location for wasting spoil materials and a letter from the owner giving permission for that disposal prior to starting on-site construction with a city grading permit."

(G) "Grading and drainage plan approval includes: construction of drainage plan, including but not limited to retention and detention areas and/or other drainage facilities, surface grading, walls, curbs, asphalt pavement, and building floor elevations."

(H) "The contractor shall provide all retention and detention basins at elevations and locations as shown on the plans."

(I) "The contractor is responsible for locating and confirming depth of all the existing utility lines within proposed retention basin areas. If the basin cannot be constructed per plan as a result of conflict with underground utilities, the contractor shall contact the development services project engineer and designer and request modification of the basin design."

(J) "The set of plans has been reviewed for compliance with city requirements prior to issuance of construction permits and shall be kept at the construction site. Such review shall not prevent the city from requiring correction of errors in plans which are found to be in violation of any law or ordinance."

(K) "It is hereby advised that no person shall use any mechanical equipment for land leveling or clearing, road construction, trenching, excavating, demolition or engage in any earthmoving activity without first obtaining a permit from the Pinal County Air Quality Control District. (This notice is issued pursuant to A.R.S. § 49-431, Notice of Building Agencies)."

(L) "As-built drawings, certified by the developer's engineer or surveyor, shall be submitted and approved per § 10-1-5(C) prior to issuance of a building certificate of occupancy (see As-Built Requirements, A.J.C.C., Vol. II, Article 10-9)."

§ 10-2-15 WATER MAIN CONSTRUCTION NOTES.

Plans for water main construction within the city right-of-way or easements and within the service area of the Apache Junction Water Utilities Community District ("WUCFD"), the Apache Junction Water District ("AJWD") or the Arizona Water Company ("AWC") shall have the following shown on either the cover, note or detail sheet and/or will depict the water construction notes per the the WUCFD/AJWD when the water main construction is within its service area:

"CITY OF APACHE JUNCTION
WATER MAIN CONSTRUCTION NOTES"

(A) "Contractor will expose any lines being tied into to verify location."

(B) "Backfilling shall not be done until lines are inspected and approved by the city engineer."

(C) "Valves shall be furnished and installed by the contractor according to MAG, city supplements, WUCFD/AJWD and/or AWC."

(D) "Backflow prevention assemblies shall be furnished and installed by the contractor according to MAG, city supplements, WUCFD/AJWD and/or AWC. Assemblies two inches and smaller shall be placed in a protective cage painted a neutral or earthtone color. Larger assemblies (three inches and above) shall be painted a neutral or earthtone color."

(E) "Fire hydrants shall be furnished and installed by the contractor, and shall be painted chrome yellow after installation. Approved fire hydrant list is available at the WUCFD/AJWD and/or AWC."

(F) "All service lines shall be Type K copper tubing. The minimum size service line shall be 1-inch. Service lines shall be continuous under pavement without a connection or extension (see Apache Junction Standard Detail AJW-101)."

(G) "All taps shall use all bronze double strap service saddle."

(H) "WUCFD/AJWD and/or AWC will install all meters two inches and smaller after all appropriate fees have been paid and paperwork completed. Services up to two inches shall be installed per Apache Junction Standard Detail AJW-101. Larger meters and services shall be in accordance with A.J.C.C., Vol. II, § 10-5-3(E) and (F) of this Chapter."

(I) "Pavement replacements shall be made to Apache Junction Standard Detail AJ-200M."

(J) "As-built drawings, certified by the subdivider's engineer, shall be submitted to and accepted by the city engineer before final acceptance of the work (see A.J.C.C., Vol. II, Article 10-9, As-Built Requirements, of this Chapter)."

(K) "Plans submitted for projects within the AWC service area shall show notes per AWC requirements as approved by the city."

§ 10-2-16 SEWER CONSTRUCTION NOTES.

Plans for sewer construction within the city right-of-way or easements shall have general notes and construction notes shown on either the cover, note or detail sheet. The Superstition Mountains Community Facilities District No. 1 ("SMCFD") shall be contacted by the developer for the required list of notes.

§ 10-2-17 CIVIL ENGINEERING PLAN REVIEW CHECKLIST.

The following checklist will be used as a guide to review all civil engineering improvement plans submitted to the city:

CITY OF APACHE JUNCTION
DEVELOPMENT SERVICES

CIVIL ENGINEERING PLAN REVIEW CHECKLIST

PRODUCT: _____

LOCATION: _____

LOG NO: _____

LEGEND	REVIEW	REVIEWED BY	DATE
/-Requirement satisfied	1		
O-Requirement not satisfied	2		
?-Unable to determine status, more information is required	3		

GENERAL

ITEM	REQUIREMENT	COMMENTS
IMPROVEMENT PLAN FORMAT		
1.	The civil plans must be submitted on 24-inch x 36-inch sheets.	
2.	The scale must be shown on the plans. An engineering scale must be used.	
3.	North arrow must be shown on each sheet.	
4.	A vicinity or site map is needed on the cover sheet.	
5.	The name of the proposed development must be shown on the cover sheet.	

ITEM	REQUIREMENT	COMMENTS
6.	The city's standard general notes must be shown on the cover sheet.	
7.	The developer's name, address and phone number must be shown on the cover sheet.	
8.	The engineer's name, address and phone number must be shown on the cover sheet.	
9.	Each sheet of the civil package must be signed and sealed by the civil engineer preparing the plans.	
10.	All elevations must be referenced to an approved city benchmark. The city's benchmark number, description and elevation must be shown.	
11.	The quantity tabulation must be shown on the cover sheet, including grading cut and fill quantities. On-site improvements shall be separated from the off-site improvements.	
12.	A list of all affected utility companies shall be identified (including but not limited to Apache Junction Water Utilities Community District, Arizona Water Company, CenturyLink, Southwest Gas, SRP, MediaCom) and the dates plans were submitted to them.	
13.	Approval signature lines and dates for the following shall be clearly delineated:	
	a. development services department Engineer, City of Apache Junction	
	b. public works department Engineer, City of Apache Junction	
	c. Superstition Fire and Medical District	
	d. Superstition Mountains Community Facilities District No. 1	
	e. Apache Junction Water Utilities Community District	
	e. Arizona Water Company	
	f. Pinal County Health Department or date and copy of the approval letter with a note of the date on the plan	
	g. ADEQ or date and copy of the approval to construct water and sewer with a note the date on the plan	

ITEM	REQUIREMENT	COMMENTS
14.	Perimeter traverse data shall be delineated for the project boundaries.	
15.	The minimum height of all text and lettering shall be 0.1 inch.	
16.	A legend identifying the symbols used on the plan sheets shall be delineated.	
17.	An index map shall be shown with street names, lot, tract and parcel numbers, sheet numbers and phase limits and numbers if applicable.	

GRADING AND DRAINAGE

18.	All existing buildings and significant structures or items must be shown, and also drainage structures, washes, ditches, easements and other like items. If any of the items so noted are to be removed, they must be noted as such.	
19.	The grading and drainage plans must encompass the entire development with all lots, tracts and parcels being shown in their entirety.	
20.	The existing topography must be shown by contours. Spot elevations are required when the subdivision's topography cannot be clearly defined by contours. Spot elevations are required immediately off-site adjacent to the subdivision boundary sufficient to permit analysis of grade differentials and drainage.	
21.	Existing storm drainage facilities such as retention basins, catch basins, scuppers and storm drain pipes must be shown.	
22.	Existing washes, ditches, lakes and other water features must be shown with any modifications being noted. Existing washes entering the property must continue through the property and exit at the current natural locations. All natural runoff entering the site must be delineated.	
23.	All portions of the development within the FEMA flood zones must be identified as well as flood mitigation measures being shown. (FEMA elevation certificate for pre and post developments must be attached.)	

ITEM	REQUIREMENT	COMMENTS
24.	Existing spot elevations must be shown for all existing curb and gutter adjacent to the development. Elevations must be shown adjacent to each property corner, at all grade breaks and at all scuppers/catch basins.	
25.	Cross-sections must be shown across the development's property lines with the maximum allowable elevation difference between adjacent properties to be 1 foot and with natural off-site overland drainage flows being unobstructed.	
26.	Cross-sections must be shown for all retention basins showing bottom elevation, high water elevation and the basin edge elevation. The maximum allowable side slope is 4:1 and the maximum water depth is 3 feet.	
27.	The following NOTE shall appear on the cover sheet: "The proposed retention basins are to drain within 36 hours. If the basins do not drain within the required 36 hours, the owner will be required to install drywells or other means to be approved by the development services project engineer to meet the requirement."	
	Any proposed drywells must be registered with the ADEQ that meet the following requirements:	
	a. All drywells serving 1 acre or more of paved areas are to be the dual chamber type such as the MaxWell Plus or equal.	
	b. The Envibro System is to be used for areas where chemical or petroleum spills or hazards may be possible.	
28.	Construction details, plan and profile views must be shown for all proposed drainage facilities such as:	
	a. Scuppers and catch basins	
	b. Storm drains	
	c. Hydraulic profile must be shown	
	d. Scupper inlet and chute elevations are required	
	e. Trash Rack is required at all open ends of pipe 18 inches or more in diameter. MAG Standard Detail 502-2 shall control.	
	f. Scupper inlet and chute elevations are required	

ITEM	REQUIREMENT	COMMENTS
29.	The following information must be shown for each lot:	
	a. Proposed elevations at front lot corners, typically top of curb elevations	
	b. Proposed elevations at rear lot corners	
	c. Proposed finished pad elevations	
	d. Proposed finished floor elevations	
	e. Top and bottom elevations on retaining walls	
	f. All existing block walls on and adjacent to subdivision boundaries and retention basin perimeters must be shown with top of wall elevations	
	g. All proposed block walls on subdivision boundaries and retention basin perimeters	
30.	All drainage pipes and equalizer pipes are to be 12 inches minimum in diameter with headwalls.	
31.	A drainage report is required and shall include the following:	
	a. An exhibit delineating each drainage area with the corresponding retention basins and drainage structures. Arrows must be provided indicating drainage flows, patterns and overflows	
	b. An explanation of off-site flows and overland contributions including FEMA flow zones	
	c. Calculations determining the volume of retention for each drainage area	
	d. Calculations showing the amount of retention for each drainage area	
	e. Calculations determining the depth of ponding within the retention basins	
	f. An explanation of the low outfall elevation for each drainage area including the effects of an overflow situation with the elevation being stated in the report	

ITEM	REQUIREMENT	COMMENTS
	g. Retention basin drain time calculations. If drywells are necessary to meet the 36-hour drain time requirement, the number of drywells must be determined	
	h. Street hydraulic calculations showing that the 10-year storm runoff is retained within the curbs and the 100-year runoff is contained at least 6 inches below the finished floor elevations	
	i. Storm drainage inlet and pipe sizing and capacity calculations	
	j. An explanation of the minimum finished floor elevation within the development with the elevation being above the low outfall elevation of the site	
	k. All calculations, formulas, charts with summarized tabulations	
32.	Structural design calculations are required for the following:	
	a. Storm drains subject to wheel loads	
	b. Retaining walls	
33.	A building permit is required for all retaining walls.	

PAVING PLAN

34.	The pavement cross-section design shown on the plans must comply with the city engineering standards.	
35.	All existing driveways, street lights and fire hydrants within 200 feet of the property boundaries on both sides of the streets.	
36.	Actual street cross-sections to scale at 50- to 100-foot intervals for all perimeter streets. Include pavement centerline elevation, station, pavement join elevation and top of curb elevation.	
37.	Typical sections for each street to be improved on detail sheet with the following items:	
	a. Right-of-way width	
	b. Width of sidewalk	

ITEM	REQUIREMENT	COMMENTS
	c. Width of improved surface. (24 feet minimum is required for half-street for 2-way traffic)	
	d. Type of curb and gutter	
	e. Pavement cross-section	
	f. Pavement cross-slope	
	g. Pavement structural sections	
38.	A portion of the improvements and what jurisdiction governs. The permit number shall be shown on the cover sheet.	
39.	Deceleration lanes (with right/left turn arrows) for the proposed driveways are required based on a traffic impact analysis, and additional right-of-way for the deceleration lanes.	
40.	Street lights every 180-200 feet on all streets within and adjacent to the development with the following details noted:	
	a. Luminaire size (lumens). (Local-9,500), (Collector-16,000), (Major/Minor Arterial – 30,000), (Principal Arterial/Parkway – 50,000)	
	b. Luminaire mounting height. (Local-32 feet), (Collector-32 feet), (Section Line-35 feet),	
	c. Dimension from the street centerline to the proposed pole (1 foot behind sidewalk or 2.5 feet behind curb with no sidewalk)	
	d. Dimension from property corners to the proposed street light	
	e. Stationing for each proposed and existing light	
	f. Dimension to the nearest existing light within 200 feet of the property on both sides of the street	
41.	The following layout items must be shown on each sheet:	
	a. North arrows	
	b. Plan and profile scale	
	c. Phase limits and numbers	
42.	The following utility reference items must be shown on each sheet:	

ITEM	REQUIREMENT	COMMENTS
	a. All existing utilities	
	b. All proposed utilities	
	c. Utility crossings must be shown in profile view when the crossings are not detailed on utility plan sheets	
	d. All power pole locations	
43.	A Master Utility Plan including water, sewer, storm drain and street light information.	
44.	The following design items must be shown on each sheet in plan view:	
	a. Existing right-of-way with width dimensioned	
	b. Existing pavement with width dimensioned	
	c. Existing curbs with width dimensioned	
	d. Existing sidewalk with width dimensioned	
	e. Existing sidewalk ramps	
	f. Proposed right-of-way with width dimensioned	
	g. Proposed pavement with width dimensioned	
	h. Proposed curbs with width dimensioned and MAG Standard Detail number call-out	
	i. Proposed sidewalk with width dimensioned and MAG Standard Detail number call-out	
	j. Provide a 5-foot temporary sidewalk turndown at the ends of the sidewalk improvements	
	k. Proposed sidewalk ramps (MAG Standard Detail 231-A)	
	l. Proposed sidewalk ramps at "T" intersections (MAG Standard Detail 233-C)	
	m. Existing items to be protected in place	
45.	The following design items must be shown on each sheet in profile view:	
	a. Existing grade at right curb line	
	b. Existing grade at left curb line	

ITEM	REQUIREMENT	COMMENTS
	c. Existing grade at centerline	
	d. Proposed grade at right curb line	
	e. Proposed grade at left curb line	
	f. Proposed grade at centerline	
	g. Proposed centerline elevation at curb return station on crown run-outs	
	h. The proposed longitudinal grades must be labelled with longitudinal grades on curves tol be computed based on their true lengths that comply with the city standards	
	i. Storm drain crossings	
	j. Utility and other crossings whenever minimal cover, 1 foot or less below subgrade	
46.	The following traffic engineering items must be shown in plan view:	
	a. Street signs	
	b. Traffic control devices:	
	1) Stop sign MUTCD R1-1, 30 inches by 30 inches per Apache Junction Standard Detail AJ-28.1	
	2) Speed limit sign MUTCD 22-1, 24 inches by 30 inches	
	3) Dead end sign as required per Apache Junction Standard Detail AJ-28.1	
	c. Temporary turnaround at dead-end streets and phase lines	
	d. Barricade with 9 red prismatic reflectors on red sheeting MUTCD M1-9R for each 10 to 12 feet of barricade	
	e. Signing and striping plans for section line streets and/or special conditions	
47.	The following survey design items must be shown on each sheet:	
	a. Station numbers with sheet reference at all match lines in plan or profile	

ITEM	REQUIREMENT	COMMENTS
	b. Centerline survey data	
	c. Station numbers at all changes in street alignment, intersections, curb returns and grade breaks in profile	
	d. Gutter and centerline spot elevations at all grade breaks	
	e. Gutter spot elevations at all intersections	
	f. Centerline spot elevations at all intersections	
	g. Grade breaks in plan	
48.	Street geometrics must meet city standards or general engineering practices for the following items:	
	a. Centerline radii	
	b. Tangent lengths between curves	
	c. Tangent lengths at intersections	
	d. Pavement tapers	
	e. Intersection angles	
	f. Vertical curve lengths	
	g. Maximum longitudinal slope changes	
	h. Barrier median construction	
	i. Driveway installations	
49.	Sufficient existing off-site elevations needed to determine grade and direction of slope.	
50.	Structural design calculations for storm drains subject to wheel loading.	
51.	An easement or right-of-way dedication shall be by separate instrument. The following exhibits and/or information are needed for staff review:	
	a. Type of easement or right-of-way	
	b. Legal description signed and sealed by a registered land surveyor, labelled Exhibit "A" to city provided deed form	

ITEM	REQUIREMENT	COMMENTS
	c. Detail map based on the description signed and sealed by a registered land surveyor, labelled Exhibit "B" to city provided deed form	
	d. A current title report	
	e. If there is a lien on the property such as a trust deed, a partial release and partial reconveyance deed shall be included	
52.	Please add the following statement on the cover sheet:	
	"The City of Apache Junction approved these plans for conformance with the city codes, standards, and policies. The City of Apache Junction is not responsible for design, assumptions, conclusions or accuracy of the information contained herein or in the supporting documents."	
53.	An engineering cost estimate for all work within the public right-of-way shall be submitted	
54.	An improvement assurance bond shall be submitted based on the above engineering cost estimate. The improvement assurance must be provided prior to issuance of any permits.	
55.	A drainage and retention agreement on the enclosed original city form shall be provided, along with the legal description (Exhibit "A") and map (Exhibit "B") with original RLS seal and signature.	
56.	The following statement on the cover sheet shall be conspicuously legible: "Approval of these plans shall not prevent the city from requiring correction of errors in the plans where such errors are subsequently found to be in violation of any law, ordinance or other health/safety issue."	
57.	The following note on the cover sheet shall be conspicuously legible: "The improvements shown on this set of plans will not be fully approved by the city and the certificate of occupancy will not be issued until the overhead utility lines are undergrounded and/or the power poles are relocated."	
58.	The following statements on the improvement plans shall be conspicuously legible if they are applicable:	

ITEM	REQUIREMENT	COMMENTS
	"The contractor shall establish the grade line for the new curb and gutter according to the approved plans. If the cross slope between the existing edge of pavement and the proposed lip of gutter is greater than 3% or less than 1%, the new curb and gutter line shall be modified or an additional asphalt sawcut will be required to bring the cross slope to 2% (+/- 1%)."	
	"Provide 3,000 psi concrete cap over a pipe for any area where the minimum cover requirements is not achievable."	
	"MAG Standard Detail 250 is to be utilized as driveway entrance location where vertical curb provided."	
	"Safety rails must be provided at any area behind the sidewalk or sidewalk ramp that is deeper than 18 inches from finish ground."	
	"There shall be an 18-inch sedimentation basin at the bottom of catch basin, and bubbler box."	
59.	A Storm Water Pollution Prevention Plan and a copy of the Notice of Intent form approved by the Arizona Department of Environmental Quality for the Arizona Pollutant Discharge Elimination System General Permit shall be provided.	
60.	A copy of Drywell registration issued by the Arizona Department of Environmental Quality shall be provided.	
61.	A copy of Drywell percolation test result after installation shall be provided.	
62.	Final approved plans per per § 10-1-5(C) *Electronic Submittal Requirements* shall be provided.	

Note: The **redlines** are considered to be a part of these comments and may contain comments not listed herein.

PLEASE RETURN THIS CHECKLIST AND THE CHECKPRINTS WITH THE NEXT PLAN REVIEW SUBMITTAL.
If there are any questions, please call (480) 474-5077.

ARTICLE 10-3: STREET DESIGN AND CONSTRUCTION

Section

10-3-1 General comments
10-3-2 Street geometrics
10-3-3 General technical information
10-3-4 Design standards
10-3-5 Street structural section (aggregate base, asphalt base course and asphalt surface course)
10-3-6 Street improvements
10-3-7 Construction
10-3-8 Engineer reports

§ 10-3-1 GENERAL COMMENTS.

(A) This section describes the minimum geometric requirements to be used in the preparation of construction plans that involve public street improvements. The requirements described herein are primarily based on safety considerations; therefore, standards that provide a greater degree of safety may be used within reasonable economic limits, but standards that provide a lesser degree of safety may not be used without approval from the city engineer.

(B) While every effort has been made to ensure the accuracy and completeness of these standards, the city shall not be held responsible for any errors or omissions. It shall be the sole responsibility of the design engineer to ensure a proper design and the accuracy and completeness of construction documents containing his or her signature.

§ 10-3-2 STREET GEOMETRICS.

(A) *Use of national standards.*

(1) *Geometric design standards.* The American Association of State Highway and Transportation Officials ("AASHTO") policies on highway design are approved references and are to be used together with this chapter.

(2) *Traffic control standards.* All traffic control devices shall be in accordance with the latest *Manual on Uniform Traffic Control Devices* ("MUTCD") prepared by the U.S. Department of Transportation and the *City of Phoenix Traffic Barricade Manual.*

(3) *Special areas.* For those areas that are located in the special designated areas (see Apache Junction Standard Detail AJ-12.1), see A.J.C.C., Vol. II, Appendix 10-A, 10-B or 10-C for additional requirements in addition to this Article.

(B) *Definitions.* For the purpose of this chapter, the following definitions shall apply unless the context clearly indicates or requires a different meaning.

ALLEY. A public thoroughfare that affords only a secondary means of access to abutting property.

(a) ***MAJOR ALLEY.*** Serves multi-family residential, commercial, and industrial areas.

(b) ***MINOR ALLEY.*** Serves single-family residential areas.

DEVELOPER. The individual, firm, corporation, partnership, association, syndicate, trust, or other legal entity that files the application and initiates proceedings for the development and/or subdivision of land in accordance with the Apache Junction City Code, Vol. I.

EASEMENT. A grant by the owner for the use of specified land by the public, a corporation or persons, for specific uses and purposes and so designated and recorded in the county recorder's office.

MEDIAN. A raised or flush area designed to separate and control vehicular movement typically located near or in the center of the right-of-way.

PEDESTRIAN WAY. A public walk dedicated entirely through a block from street to street and/or providing access to a school, park, recreation area or shopping center.

RIGHT-OF-WAY. Any land which by deed, conveyance, agreement, easement, dedication, usage, zoning condition, process of law or other means is reserved for or dedicated to the general public for street, highway, alley, public utility, pedestrian walkway and other public purpose.

STREET. Any existing or proposed avenue, boulevard, road, bridge, viaduct or easement for public vehicular access or area shown in a plat duly filed and recorded in the county recorder's office, and includes all land within the right-of-way whether improved or unimproved and also such improvements as pavement, shoulders, curbs, gutters, sidewalks, parking spaces, bridges, viaducts and traffic control devices.

(a) ***ARTERIAL STREET.*** One of exceptional continuity that is intended to carry the greater portion of through traffic from one area of the city to another and is generally positioned at 1-mile intervals.

(b) ***COLLECTOR STREET.*** Onet designed with the primary purpose of collecting and distributing traffic to and from arterial streets.

1. ***INDUSTRIAL COLLECTOR.*** A street serving commercial, industrial or other land uses expected to generate high traffic volumes or substantial heavy truck traffic.

2. ***RESIDENTIAL COLLECTOR.*** A street serving predominantly residential land uses.

(c) ***CUL-DE-SAC.*** A short local street having but one end open for vehicular traffic, the opposite end being terminated with a permanent turnaround.

(d) ***DRIVEWAYS.***

1. ***COMMERCIAL DRIVEWAY.*** Access for retail, office, high density residential or government/community service building.

2. ***INDUSTRIAL DRIVEWAY.*** Access for large industrial, office park, mixed use or warehouse developments which may also accommodate heavy truck movements.

3. ***PARKING LOT ACCESS WAY.*** Passage to and circulation among parking areas within an integral apartment or townhouse complex.

4. ***RESIDENTIAL DRIVEWAY.*** Access to single-family residence from local or collector street only.

(e) ***LOCAL STREET.*** Typically, one of limited continuity with the primary purpose of service to only those lots which are adjacent.

(f) ***PRIVATE STREET.*** One not owned or maintained by the city.

(g) ***PUBLIC STREET.*** One owned and maintained by the city.

(h) ***RURAL STREET.*** One located within a low density area.

(C) *Street types.* The city has the following four street types:

(1) *Parkways.* Parkways provide for efficient movement of large volumes of through traffic with direct access being limited.

(2) *Arterial streets.* Arterial streets with or without raised medians provide regional continuity and carry large volumes of traffic between areas of the city and through the city. Full access to abutting commercial and multi-family land uses is limited to median openings where there is a raised median. Single-family residential developments shall not have direct access to an arterial street, unless approved by the city engineer.

(3) *Collector streets.* Collector Streets provide direct access to abutting land uses, handle local traffic, and provide access to the arterial street system and are normally connected with local streets.

(4) *Local streets.* Local streets provide direct access to abutting land uses, handle local traffic and provide access to the collector street system.

(D) *Street classification.* Following is a listing of each street classification followed by the number of the detail that depicts the standard street cross-section for that classification.

Street Type	***Detail***
Local	AJ-20.1
Collector	AJ-20.2
Minor and Major Arterials	AJ-20.3
Principal Arterials	AJ-20.4
Parkway	AJ-20.5

(1) Street classifications are determined by location and/or intended use.

(2) All developments shall provide for public arterial and collector streets at their normal alignments except in the Lost Dutchman Heights, or as approved by the city engineer.

(E) *Street names.* Street names shall be consistent with the natural alignment and extension of existing streets. New street names shall not duplicate in whole or in part or be confusing with existing street names. The city council reserves the right to modify street names to conform to city standards.

(F) *Intersections to arterial streets.* Interior streets shall not intersect arterial streets other than at the 1/4- and 1/2-mile points of the arterial or as approved by the city engineer.

§ 10-3-3 GENERAL TECHNICAL INFORMATION.

(A) *Street name signs.*

(1) All new developments shall provide for street name signs and posts at all intersections. The developer shall install these signs and posts at public street intersections per Apache Junction Standard Detail AJ-28.1.

(2) Private streets shall be signed by the developer as approved by the city's development services department.

(B) *Survey monuments.*

(1) All developments shall provide survey monuments at section corners, street centerline intersections, street centerline alignment changes (Point of Curvature ["PC"], Point of Tangency ["PT"], or Point of Intersection ["PI"] if it is within street pavement). For new building construction replacement of monuments for areas outside the right-of-way shall be per Arizona State Board of Technical Registration rules and requirements.

(2) All section corners, 1/4-corners, and center of section shall be a brass cap in a hand hole per MAG Standard Detail 120-1, Type "A." All other required survey monuments shall be a brass cap on the surface per MAG Standard Detail 120-1, Type "B."

(3) All existing monumentation shall be preserved both horizontally and vertically.

(C) *Barricades and delineators.*

(1) All new developments shall provide for barricades at all dead ends, temporary dead ends and incomplete streets per MAG Standard Detail 130, Type "B."

(2) New barricades shall be constructed per MAG Standard Detail 130, Type "B" modified with red and white reflectorized stripes using engineer grade reflective sheeting.

(3) Barricades installed with phased construction may be relocated within the same development.

(4) Delineators are required to guide traffic at all necessary locations (such as pavement tapers). Minimum spacing (in feet) between delineators is the same as the speed limit (in miles per hour) for the roadway.

(D) *Conduits, sleeves or carrier pipes.* Projects that have parkway landscaping with irrigation lines under public streets shall install conduit sleeves for the irrigation line(s) prior to the paving improvements. All parkway landscaping shall be as directed and approved by the Apache Junction parks and recreation department.

(E) *Signage and striping.* All signage shall be per the latest MUTCD and striping shall be per the latest edition of AASHTO's Geometric Design of Highways and Streets. Signing and striping shall be approved by the city engineer.

Pavement Marking Plans

1. "General Notes:"
    A. "All pavement markings shall conform to the ADOT Standard Drawings and Specifications unless otherwise specified in the latest edition of the MUTCD handbook, or as noted on the plans."
    B. "All lane dimensions are from center of lane line, center of double lane line, face of curb, or edge of pavement unless otherwise noted."
    C. "The pavement marking drawings are schematic only. The contractor shall follow all dimensions, details, and standards when installing pavement striping, markings and markers."
    D. "All signing and pavement markings shall be installed within five (5) days of completion of the final lift of asphalt or as required by the Engineer."
    E. "The contractor shall clean the roadway surface to the satisfaction of the city engineer by sweeping and air-jet blowing immediately prior to the placement of all pavement markings."

2. Plan Requirements:
    A. North arrow and scale shall be included on each plan sheet, excluding notes and detail sheets.
    B. ROW, edge of pavement, and curbs are to be clearly delineated, excluding drainage facilities, utilities, topographic lines, but including all driveways and intersecting streets.
    C. Limits of the project, beginning and ending stations, are to be provided. The limits of pavement surface treatments that are being applied to allow for pavement marking changes should also be defined.
    D. Centerlines and stationing are to be provided and shown within the roadway limits, not external to the curb or edgelines.
    E. Taper lengths (bay tapers, storage lengths, approach and departure tapers) relative to the roadway design speed or posted speed limit, per the latest edition of AASHTO's Geometric Design of Highways and Streets.
    F. The proposed new striping patterns and type are to be compatible with existing striping on both ends of the project.
    G. All striped lines are to be labelled correctly.
    H. Edgeline striping should end at the beginning of the radius, PC; centerline striping ends at mid radius.

I. Striping plans should extend 500 feet on either side of the project, and transitions from existing striping patterns to new patterns should be defined.
J. The roadway cross section is to be properly dimensioned at locations where the cross section changes. This includes beginning and ending of median and edgeline/curbline tapers, beginning and ending of lane shift tapers of tapers to add a lane, both legs of major intersections and locations where the pavement widens or narrows. The dimensioning shall include widths of all lanes (thru, turn, multi-use, bike), median widths, and paved shoulders. Cross section change locations shall be denoted by station. Striping taper lengths shall be noted.
K. Crosswalks and stop lines are to be properly placed relative to sidewalk ramps and median walk throughs. The approach crosswalk line shall be spaced 4 feet from the stop line and the crosswalk lines shall be spaced 10 feet apart.
L. Pavement Arrows and "ONLY" designations for mandatory turn lanes are typically applied only at signalized intersections. Arrows and ONLYs can be applied at unsignalized intersection at the discretion of the city engineer. The location of the approach edge of all legends should be either dimensioned, typically from the stop line, or stationed.
M. All roadway names should be identified, include side streets.
N. An appropriate title block designating submittal status, date, designer, and engineer shall be provided on each plan sheet.
O. A separate sheet containing general notes, symbol legend, pavement marking quantities, and details shall be provided.

Traffic Signing Plans

1. "General Notes:"
   A. "All signs shall conform to the latest edition of the MUTCD."
   B. "Signs may be modified and locations adjust to fit conditions as directed by the city engineer."
   C. "All sign station locations are approximate. The contractor shall verify actual sign locations with city engineer prior to the installation of all signs."
   D. "The contractor shall be responsible for coordinating all work with Blue Stake and for installing all traffic signs in the field."
   E. "The Design Speed for the road is ___. The Posted Speed limit for the road is ___. Sign placement shall be based on the posted speed limit."

2. Plan Requirements:
   A. All signing shall conform to the latest edition of the MUTCD.
   B. North arrow and scale shall be included on each plan sheet, excluding notes and detail sheets.
   C. Design speed and posted speed limits of the project are to be noted on the Traffic Signing General Notes.
   D. ROW, edge of pavement, and curbs are to be clearly delineated, excluding drainage facilities, utilities, topographic lines, but including all driveways and intersecting streets.

E. The existing roadway and proposed signing for 500 feet beyond the project limits or to the nearest intersection, whichever is less shall be shown.
F. The base sheets for the Signing Plans shall be the pavement marking plan sheets. These sheets shall show match lines and include the traffic signal, street lighting and pavement marking in the background. All major and minor streets shall be identified and labelled correctly. The plan symbol legend may be included depending on available space. All signs will be oriented in the direction seen by the motoring public with the correct FHWA sign illustration and identified by the MUTCD letter/number or appropriate designation and station.
G. All new and existing signs within the right-of-way shall be identified. The existing signs shall be labelled "EXISTING SIGN" and shall indicate whether it is to remain, be relocated or be removed. If the sign is shown on the sheet, they shall be grayed out or shown with dashed lines.
H. Signs shall be placed per Town of Gilbert Standard Detail 201 and 201A. The "No Parking" symbol shall be no smaller than 18"x18" and the "No Parking" Symbols shall be installed below all speed limit signs.
I. Signing quantities and installation location are subject to change at the time of installation.
J. Any sign that is to be installed within 25 feet of an existing street light pole shall be installed on that pole and not on a separate support. Signs that need to be removed during construction shall be done so by the Contractor at their expense.
K. The Contractor shall allow the concrete in the postholes to cure for at least 24-hours prior to standing the poles.
L. All signing shall be installed within five (5) days after the installation of the first lift of asphalt.

§ 10-3-4 DESIGN STANDARDS.

Street design will be in accordance with the following criteria, subject to the approval of the city engineer. Geometric design standards not specifically included in this standard will conform to the latest *A Policy on Geometric Design of Highways and Streets,* published by the AASHTO.

(A) *Street right-of-way requirements.*

(1) The right-of-way requirements shall be as shown in Apache Junction Standard Details AJ-20.1 through AJ-20.8.

(2) Right-of-way widths in excess of the standard widths may be required in special circumstances such as when:

(a) cut or fill slopes cannot be confined within the standard width;

(b) minimum sight distance lines on horizontal curves are not within standards;

(c) minimum sight distances at intersections are not within the standards; and

(d) auxiliary lanes are to be provided.

(B) *Intersections.* Although all intersections share certain common elements, they are not subject to generalized treatment.

(1) *Minimize conflict.* To minimize conflicts and provide for anticipated traffic movements, each intersection must be evaluated with regard to its individual characteristics, and designed based on the following factors:

(a) traffic factors such as capacities, turning movements, vehicle size and operating characteristics, vehicle speed, pedestrian movements, transit operations and accident history;

(b) physical factors such as topography, existing conditions, channelization requirements; and

(c) human factors such as driving habits, reaction to surprises, decision and reaction time, and natural paths of movement.

(2) *Angle of intersection.* A right-angle intersection provides the shortest crossing distance for intersecting traffic streams. It also provides the most favorable condition for drivers to view and judge the relative position and speed of intersecting vehicles. Where special conditions exist, intersection angles may diverge from a right angle with approval of the city engineer.

(3) *Alignment and profile.* Intersections occurring on horizontal or crest vertical curves are undesirable. When there is latitude in the selection of intersection locations, vertical or horizontal curvature should be avoided. A line or grade change is frequently warranted when major intersections are involved. If a curve is unavoidable, it should be as flat as site conditions permit. Where the grade of the through roadway is steep, flattening through the intersections is mandatory.

(4) *Intersection sight visibility.*

(a) *Sight visibility triangles.* Clear lines of sight will be maintained along all streets, alleys and driveways to assure the safety of motorists and pedestrians.

(b) *Lines of sight.* Lines of sight will not be obscured between 24 inches and 6 feet through a triangular area adjacent to a driveway, an alley or a street, where such access ways intersect with another street in a T-configuration. The sight visibility triangle, or sight triangle, consists of three sides that are formed by two intersecting access ways and a line connecting the two.

(C) *Sight distance.*

(1) Adequate sight distance shall be provided at all intersections, alleys and driveways.

(2) The determination of whether an object constitutes a sight obstruction shall consider both the horizontal and vertical alignment of both intersecting roadways, as well as the height and position of the object.

(3) The sight distance required varies according to traffic speeds on the through road. A designer shall provide the sight distance based on the latest AASHTO *Policy on Geometric Design of Highways and Streets* and submit it with the plans.

(D) *Street slopes.*

(1) *Typical street cross-slope.* Undivided streets should have a normal crown that is a two-way cross-slope with the cross-section high point on the street centerline. Divided streets should have cross-slope on each pavement section. The high point of each slope on each pavement section shall occur on the edge of the pavement nearest to the median. Existing conditions may cause cross-slope requirements to vary. The nominal cross-slope is 2%, with a maximum cross-slope of 3% and a minimum cross-slope of 1%. Any deviation from the nominal cross-slope shall be approved by the city engineer.

(2) *Cross-slopes in street dip sections.* While dip sections are discouraged, where storm drainage runoff flows must cross the street, dip sections are needed and must be approved by the city engineer. The pavements through the dip section should have a 1-way slope (no crown), curbing and medians must not be raised, and cut-off walls shall be installed in accordance with MAG Standard Detail 552. Transitions back to normal street cross-slopes will be needed at both ends of the dip section.

(3) *Existing cross-slope.* See A.J.C.C., Vol. II, § 10-3-6(D) for street widening standards.

(4) *Longitudinal slope.*

(a) The minimum street and gutter slope for public streets is 0.0032 feet/feet (0.32%). Special approval by the city engineer is required for slopes less than the minimum.

(b) Projects that have any area with less than the approved minimum gutter slope shall provide construction staking on the actual gutter alignment (not offset) at a spacing not to exceed 25 feet and have the grades checked by a city engineering inspector immediately preceding the concrete pour.

(c) Grade breaks and grade changes shall be clearly noted and stationed on the grading and drainage plan and the profile views.

(d) Projects with longitudinal slopes less than 0.32% shall have the gutter lines water-tested in the presence of and to the satisfaction of the city's inspector.

(5) *Vertical curves.* Roadways with a longitudinal grade break or grade change of greater than 1.5% shall be required to design and construct a vertical curve along that section of roadway. Vertical curves shall be designed, at a minimum, per the most current AASHTO standards.

(6) *Superelevation.* Although the superelevation of roadways is discouraged, unusual circumstances may require the use of superelevation. The city engineer must approve the use and design of superelevated roadways. Roadway drainage must be considered in superelevated conditions.

(7) *Undulating roadways.* Roadways shall be designed to eliminate undulations. In the case where an existing paved roadway undulates, it shall be removed full width and reconstructed to a new grade acceptable to the city engineer and the entire cost paid for by the developer.

(8) *Side slopes.* Side slopes should be designed for functional effectiveness and ease of maintenance.

(a) For areas more than 10 feet from back of curb, slopes of 4:1 or flatter shall be provided.

(b) Steeper slopes may be approved in areas more than 30 feet from back of curb when soils are not highly susceptible to erosion, or when a cut is not more than 4 feet vertical. Cuts or fills greater than four feet vertically shall be approved by the city engineer.

(E) *Pavement tapers.*

(1) Projects are required to provide sufficient pavement tapers at all necessary locations (such as the beginning or end of a project) to properly transition traffic flow between varying widths of existing and new pavement.

(2) The pavement section for tapers shall be per these standards. See Table 10-3.1 under A.J.C.C., Vol. II, § 10-3-5 below.

(3) Pavement tapers shall be constructed with a thickened edge per MAG Standard Detail 201, Type "B."

(4) Taper length formulas: Taper length for merging traffic situations are calculated by the following formulas:

(a) When the design speed is 40 mph or less: $TL = \frac{WxS^2}{60}$

(b) When the design speed is 45 mph or greater: $TL = WxS$

where:

TL = Taper length in feet

S = Design speed in miles per hour. The design speed is 5 mph over the posted speed limit.

W = Width of the offset between the edge of the travel lane and the edge of the lane after the taper

(5) Taper length for non-merging traffic situation (such as where pavement widens with traffic) is normally 50 feet minimum. However, there may be some instances when more than 50 feet of taper may be required. The requirement for a longer taper will be determined on a case-by-case basis by the city engineer.

(6) The city engineer shall investigate the existing conditions and if determined to be substandard, the project shall sawcut and remove any existing pavement tapers when extending or installing new pavement improvements.

§ 10-3-5 STREET STRUCTURAL SECTION (AGGREGATE BASE, ASPHALT BASE COURSE AND ASPHALT SURFACE COURSE).

(A) *Flexible pavement.* The flexible pavement street structural section for public streets shall be the minimum depths shown below.

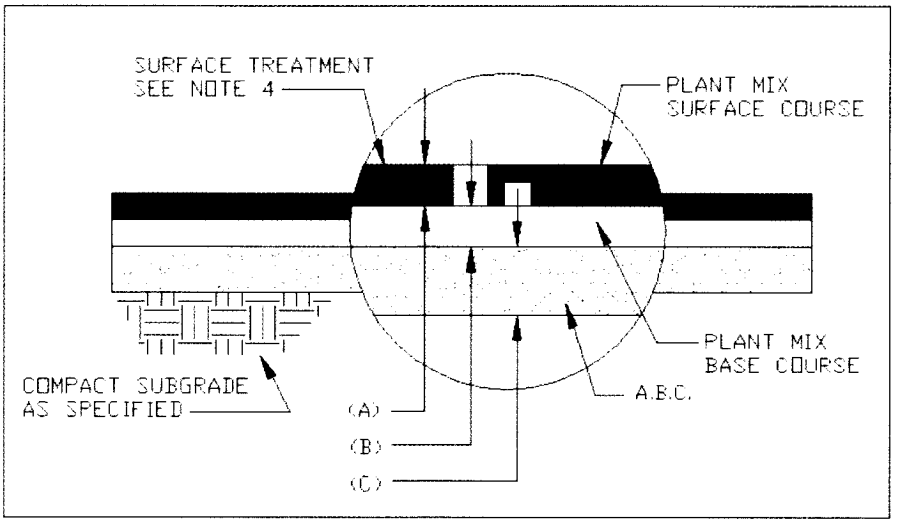

Table 10-3.1 - Street Structural Section (Minimum Depths)

Street Classifications	*Asphalt Surface Course (A)*	*Asphalt Base Course (B)*	*ABC Fill (C)*
Parkway	2.5 in. - A-19**	3 in. - A-19	12 in.*
Arterial	2.5 in. - A-19**	3 in. - A-19	12 in.*
Collector	2 in. - A-12.5**	2.5 in. - A-19	8 in.
Local Street-Residential	2.5 in. - A-12.5**	0 in.	6 in.
Local Street-Commercial and Industrial	2 in. - A-12.5**	2.5 in. - A-19	8 in.
* See Note 1			
** See Note 4			

(1) Install in 2 equal layers.

(2) ABC fill to conform to MAG Standard Specification 702.2 (aggregate base).

(3) Asphalt concrete shall conform to the latest version of the East Valley Asphalt Criteria and be approved by the EVA Committee.

(4) Surface treatment for new roadways shall be placed at the end of the 1-year warranty period. Surface treatment shall be Grade SS-1h fog seal in accordance with MAG Standard Specification 333 applied at a rate of 0.1 gallon per square yard or as otherwise directed by the city engineer.

(5) Utility adjustments and concrete collars shall be completed prior to application of surface treatment.

(6) A soil test and a street structural section recommendation by a qualified geotechnical firm shall be required unless the city engineer allows an exemption.

(B) *Rigid pavement.* Rigid pavements, such as portland cement concrete, are generally not used for city streets. If rigid pavements are used, each design must be approved by the city engineer.

(C) *Decorative pavement.*

(1) The use of decorative concrete must be approved by the city engineer. Decorative concrete will not be placed in arterial through lanes. When approved, it shall be constructed in accordance with MAG Standard Specifications Sections 340 and 725 (Class A concrete) with a minimum thickness of 8 inches.

(2) The use of interlocking paving blocks must be approved by the city engineer. When approved, they shall be installed in accordance with the manufacturer's guidelines. In addition, a minimum of 25 paving blocks of the type installed must be deposited free of charge at the city's maintenance yard for future city maintenance operations.

(D) *Miscellaneous pavement standards.*

(1) For cases where the full depth of base course cannot be constructed due to insufficient cover over existing facilities, the city engineer reserves the authority to approve equivalent alternate designs if justified.

(2) The minimum pavement cross-sectional requirement for temporary turnarounds, which are constructed at project phase lines, is six inches of aggregate base course over six inches of subgrade; *see* MAG Standard Specifications Sections 301, 310 and 702. If the temporary turnaround is constructed at a project boundary, a surface course of two inches of asphaltic concrete is required in addition to the base and subgrade noted above; *see* MAG Standard Specifications Sections 321 and 710, without lime.

(3) Temporary pavement cross-sections shall consist of two inches of asphaltic concrete over six inches of aggregate base course over 6 inches of subgrade, *see* the same MAG Standard Specifications sections noted above.

(4) The edge of the temporary pavement and the perimeter of a paved temporary turnaround shall be constructed with a thickened edge per MAG Standard Detail 201, Type "B."

§ 10-3-6 STREET IMPROVEMENTS.

(A) *Medians.*

(1) *Median widths.* Median widths (raised and not raised) are as shown on Apache Junction Standard Details AJ-20.4 and AJ-20.5.

(2) *Median curbs.* Median curbs shall be installed per Apache Junction Standard Details AJ-20.4 and AJ-20.5.

(3) *Median curb termination.*

(a) Medians shall terminate in a bullet nose per MAG Standard Detail 223. Concrete pavers may be used in lieu of concrete when approved by the city engineer.

(b) At intersections, medians shall terminate at a point perpendicular to the curb return adjacent to the median's bullet nose per MAG Standard Detail 223 or as directed by the city engineer.

(4) *Median openings.*

(a) Raised medians on arterial streets are provided to reduce conflicts and improve traffic flow. Requests for median cuts shall be approved by the city engineer to ensure that the purpose of the median is not defeated by a proliferation of median cuts.

(b) There are tw types of median cuts used in Apache Junction.

1. *Full access.* The full access cut allows left turns from the street into a site as well as left turns from a site onto the street.

2. *Partial access.* The partial access opening allows left turns from the street into a site, but it prohibits left turns from a site on to the street.

(c) Median openings shall be designed per the following criteria:

1. Median opening spacing is measured from the center of the median opening to the center of the adjacent median opening or intersection.

2. In general, full access median cuts may be provided at 1/6-mile or 880-foot points along an arterial street. Additional median openings are allowed but should be the partial access type.

3. A median cut closer than 880 feet to an arterial-to-arterial intersection shall be the partial access type.

4. Median cuts less than 660 feet from an arterial-to-arterial intersection are not allowed.

5. Median cuts less than 660 feet from any signalized intersection or an intersection likely to be signalized are not allowed.

6. Median cuts less than 880 feet from a freeway interchange generally are not permitted, although each case will be evaluated based on the configuration of the particular interchange.

7. Adjacent median cuts should not be so closely spaced as to eliminate all of the area available for landscaping in the median.

8. Left turn storage shall be provided for both directions on the major street.

9. There may be unique geometric conditions at some locations that would affect the ability to provide a median cut. Variations from these standards may be appropriate depending on the particular design features of the street under consideration, and may be approved only by the city engineer.

(d) The design and construction of median openings for private businesses shall be the responsibility of those establishments, subject to approval by the city engineer.

(5) *Median landscaping.*

(a) Landscaping within a median shall be approved by the city's parks and recreation department.

(b) Landscaping within a median along a public street shall be maintained by the city.

(B) *Curbs and gutters.*

(1) *Vertical curbs.*

(a) Vertical curbs are required for all streets except local residential and in designated rural areas.

(b) The vertical height of the curb shall be six inches on arterial or collector streets unless otherwise approved to match existing conditions.

(c) Installation shall be per MAG Standard Detail 220, Type "A" or MAG Standard Detail 222, Type "A."

(d) Vertical curbs shall be six inches at all medians and edge of roads with landscaping, equipment or vertical structures.

(e) Six-inch vertical curb will be used at all curb returns on public local residential street intersections.

(f) Six-inch vertical curb will be used at all curb returns on public local residential street intersections with collector or arterial streets.

(2) *Roll curbs*. Roll curbing is required for public local residential streets except where vertical curb is required (curb returns and the like) and is to be constructed in accordance with MAG Standard Detail 220, Type "C" or "D."

(3) *Ribbon curbs.* Where ribbon curb is needed and approved by the city engineer for public streets, the installation of the ribbon curb is to be per MAG Standard Detail 220, Type "B." Transition from vertical curb and gutter or roll curbing to ribbon curb shall be with a curb termination. Installation of the curb and gutter transition is to be per MAG Standard Detail 221.

(4) *Curb returns.* All curb returns shall be constructed with vertical curb. Curb returns shall have a minimum drop of 0.20 of a foot around the return. Maximum drops shall not exceed 5% along the face of the curb at the sidewalk ramp. *See* Table 10-3.2 for minimum back of curb radii for curb returns at intersections.

Table 10-3.2
Minimum Curb Return Radii at Intersections

	Parkway	*Arterial*	*Collector*	*Local*
Parkway	35*	35	30	**
Arterial	35	35	30	**
Collector	30	30	30	25
Local	**	**	25	20
* feet (back of curb)				
**Not allowed without written approval from the city engineer				

(5) *Height transitions.* Transitions in curb height shall occur within the curbing at an intersection between curb returns or between the wings of a driveway (from six inches to four inches for example).

(6) *Curb removal and replacement.* If existing curb and gutter must be removed and replaced, the existing asphalt pavement must be sawcut and removed to a minimum width of two feet from the lip of the new gutter. Replacement of asphalt pavement shall match existing asphalt and base thickness at a minimum.

(7) *Valley gutters.* Valley gutter and aprons, where required, are to be installed per MAG Standard Detail 240. Valley gutters are to have a minimum drop across the intersection of 0.25 foot. Valley gutters and aprons shall be constructed with Class "A" concrete.

(a) Transverse valley gutters are prohibited from being used within the city. If a transverse valley gutter is proposed, it must be approved by the city engineer.

(b) Asphalt valley gutters are not allowed on public streets.

(c) Locations of valley gutters. Valley gutters may only be used across collector streets, and local residential streets. Exceptions must be approved by the city engineer.

(C) *Turning lanes.* A separate turning lane permits separation of conflicting traffic movements and removes turning vehicles from the intersection area. Right-turn lanes shall be provided on arterial streets at all street intersections and at driveways where warranted. For left-turn lanes at signalized intersections, dual turn lanes should be considered when the turn volume exceeds 200 vehicles per hour, the opposing through volume exceeds 1,000 vehicles per hour, or the delay to left turning vehicles exceeds 45 seconds. Abrupt reduction of alignment and sight distance standards should be avoided. The minimum length of these lanes must be approved by the city engineer and are:

Table 10-3.3
Minimum Length of Turn Lanes

Turn Direction	*Street Classification*

	Parkway and Arterial	*Collector*
Left		
Storage	200*	150
Taper	150	100
Right		
Storage	150	100
Taper	100	100
* Length in feet		

(D) *Street widening.*

(1) Projects widening existing pavement are required to sawcut and remove a two-foot minimum section of the existing pavement continuous along the edge of the existing pavement.

(2) Projects that are required to widen existing pavement shall provide on the plan and profile sheets, as a minimum, existing elevation, grades at the centerline, sawcut line and gutter line at 50-foot intervals, unless a smaller interval is required by the city engineer.

(3) Also the plan sheets shall show the existing cross-slope from the existing centerline of the street to the sawcut line and from the sawcut line to the lip of proposed gutter at the same 50-foot intervals. The existing and proposed cross-slopes are to be within 1% to 3% with a desired 2%. The existing pavement must be sawcut to a line that achieves the 1% to 3% or rebuilt from the street centerline.

(4) When existing paving has been installed without surface course, the developing project shall install surface course to the centerline. The surface course shall be tapered beyond the centerline to provide a smooth transition. The city engineer shall assess the amount of tapering required to make a smooth transition to the existing pavement.

(5) The developer's engineer will be required to investigate existing pavement for composition, structural capacity and stability. If after the developer's engineer's investigation, the city engineer determines the existing pavement section is below current standards, the developer's engineer shall call out a sawcut at the construction centerline and replacement of the existing pavement with new pavement per city standards.

(E) *Partial street and half-street improvements.*

(1) Generally, a developer is required to construct the full street cross-section for the streets internal to the development and a portion of the streets surrounding the development. For partial or half-street designs, a 24-foot minimum width from lip of gutter to the edge of the asphaltic pavement and a striping plan is required..

(2) For all streets, pavement tapers shall be constructed to provide transitions between newly constructed and existing roadway sections as deemed necessary by the city engineer.

(F) *Public alleys.*

(1) New residential alleys are not allowed in Apache Junction.

(2) Commercial alleys are to be 24 feet wide. Surfacing is to be per MAG Standard Detail 202.

(3) Projects that have an alley system within or contiguous to the project which will be used as a primary means of access shall have an alley that is a minimum of 24 feet wide and paved. Paving shall be per MAG Standard Detail 202.

(4) Projects that have an alley system within, or contiguous to the project, which will not be used as a primary means of access, are required to surface the alley with a minimum of six inches of compacted aggregate base course ("ABC").

(G) *Sidewalks.*

(1) *Construction standard.* Parkway, arterial, collector and local street classifications that have sidewalks shall comply with Apache Junction Standard Details AJ-20.1 through AJ-20.5 in addition to MAG Standard Detail 230, except as otherwise approved by the city engineer.

(2) *Sidewalk widths.*

(a) Local street classification requires a four-foot wide sidewalk except in special designated area rural areas where no sidewalks are required. *See* Apache Junction Standard Detail AJ-20.1 and AJ-20.6.

(b) Collector street classification requires a five-foot sidewalk except in special designated rural areas where no sidewalks are required. *See* Apache Junction Standard Detail AJ-20.2 and AJ-20.7.

(c) Minor and major arterial street classifications require six-foot wide meandering sidewalks except in special designated rural areas where no sidewalks are required. *See* Apache Junction Standard Detail AJ-20.3 and AJ-20.8.

(d) Principal arterial and parkway street classifications require ten-foot wide meandering sidewalks. *See* Apache Junction Standard Details AJ-20.4 and AJ-20.5.

(e) Sidewalks on bridges are required to be a minimum of eight feet in width.

(3) *Width transitions.* Sidewalk width transitions shall occur either in the curb return area or across a driveway.

(4) *Location.*

(a) Sidewalks along collector, arterial and parkway streets shall be detached and linear at a distance as noted per Apache Junction Standard Details AJ-20.2 through AJ-20.5 or as specified by a technical review comment.

(b) Sidewalks along local streets shall adjoin the back of the curbing.

(5) *Sidewalk ramps.* In accordance with the Americans with Disabilities Act ("ADA"), sidewalk ramps are required at all public street intersections per MAG Standard Detail 231, Type "A."

(a) *Existing curb installation.* The installation of a sidewalk ramp in an existing curb shall be made by completely removing the existing curb and gutter. The existing asphalt pavement shall be removed and replaced as noted in the section on curb and gutter (division (B)(6) above). The sidewalk ramp will be constructed per MAG Standard Detail 231, Type "A."

(b) *Tee intersections.* Sidewalk ramps per MAG Standard Detail 233 shall be installed on the perpendicular side of the street at the tee intersections and shall be aligned with one of the curb returns on the opposite side of the street. Where roll curb is constructed, the sidewalk ramp shall be per MAG Standard Detail 220, Type "C".

(c) *Existing intersections.* Projects that adjoin or include an existing public street intersection in which sidewalk ramp(s) are not existing are required to install the necessary ramp(s) in order to comply with ADA requirements.

(H) *Driveways.* All driveways within public rights-of-way shall be designed and installed per the following:

(1) *Residential lots.* Residential lots where the sidewalk is adjoining the roll curb, both the sidewalk and the driveway in the right-of-way shall be Class "A" concrete, six inches thick.

(2) *Commercial and industrial properties.* Commercial and industrial driveways shall be installed per MAG Standard Detail 250.

(3) *Existing curb installations.* The installation of a driveway in an existing vertical curb shall be made by the complete removal of the curb and gutter. The existing asphalt pavement shall be removed and replaced as noted in the section on curb and gutter (division (B)(6) above). The driveway shall be constructed per MAG Standard Detail 250.

(4) *Driveway location limitations.*

(a) *New access.* A new access driveway will not be allowed (measured to the driveway centerline):

1. Within 30 feet of any commercial property line, except when it is a joint-use driveway serving two abutting commercial properties and access agreements have been exchanged between, and recorded by, the two abutting property owners;

2. When the total width of all driveways serving a property exceeds 50% of the curb line frontage;

3. Within 50 feet of the right-of-way line of an intersecting non-arterial street;

4. Within 100 feet of the right-of-way line of an intersecting arterial street; or

5. Within 100 feet of an approved median opening location on an arterial street.

(b) *On residential access.*

1. Residential properties that have frontage on a local street as well as on an arterial or collector street shall only access the local street.

2. In some instances, residential parcels fronting only on an arterial or collector street may be given access if alternate public access is not available and is approved by the city engineer. When such access is allowed, the driveway shall be circular or it shall have a turn-around area to ensure that there is no need for backing onto the street.

(5) *Locations delineated.*

(a) *Commercial and industrial.* Commercial and industrial driveway locations shall be delineated on the improvement plans and installed as part of the original curb and sidewalk construction per MAG Standard Detail 250.

(b) *Residential.* Residential driveway locations not delineated on the construction plans shall be identified before the curb, gutter and sidewalk is constructed and approved by the city's inspector. The driveways shall be constructed per 10-3-6(H)(1).

(I) *Deceleration lanes.* Deceleration lanes may be required on streets in conjunction with driveways and may require additional right-of-way. The location and lane length shall be determined on a case-by-case basis and shall be approved by the development services project engineer.

(J) *Bikeways, lanes and paths.*

(1) Bikeways and bike paths separate from the paved roadway require a minimum of five feet for one-way travel and a minimum of ten feet for two-way travel.

(2) Each bike lane within the paved roadway requires a minimum of four feet of additional pavement. See Apache Junction Standard Details AJ-20.2, AJ-20.3, AJ-20.7 and AJ-20.8.

(3) Bikeways, bike lanes and bike paths will be designed in accordance with the ADOT publication, *Arizona Bicycle Facilities Planning and Design Guidelines* and city policy.

(K) *Traffic signals.*

(1) Signal poles, bases and conduits with pull boxes shall be provided at all arterial and secondary street intersections.

(2) Separate conduits shall be installed for traffic signal conductor wires and traffic signal fiber optics as directed by the city engineer.

(3) An approved traffic preemption device shall be installed on all new traffic signals.

(4) All traffic control plans shall be approved by the city engineer.

(L) *Streetlights.*

(1) *Position.* Streetlights shall be positioned a minimum of one foot back of the sidewalk or a minimum of two and a half feet from the back of curb to the face of pole. Streetlight poles may be placed in the median where the median width is sufficient to maintain a minimum distance of three feet or more from the back of curb to the face of pole.

(2) *Locations.* Streetlights shall conform to the following table:

Table 10-3.4
Minimum Streetlight Standard

Street Type	***Luminaire***	***Height (Feet)***	***Spacing Min/Max (Feet)***
Local			
Residential	9,500	32	180/200
Indust/ Comm	9,500	32	180/200
Collector	16,000	32	180/200
Minor and Major Arterial	30,000	35	180/200
Principal Arterial and Parkway	50,000**	35	180/200
** Double mast arm lights in median			

(3) *New commercial, industrial and residential streetlight.*

(a) Streetlights are required on all streets adjacent to development. Streetlights shall be located at all intersections.

(b) The developer's engineer will locate perimeter lights for the project. All phasing shall be shown on the plans. The city engineer shall review the locations for approval.

(c) Proposed streetlight installations shall note the following items:

1. Luminaire size;

2. Luminaire mounting height;

3. City of Apache Junction Standard Detail number for the streetlight poles;

4. Dimensional ties from street centerline to the proposed streetlight; and

5. Dimensional ties from property corners to the proposed streetlight.

(d) The developer's engineer will provide a legend on the plans identifying the following items:

1. Luminaire size;

a. Local streets - 9,500 Lumen;

b. Mid-section line and collectors - 16,000 Lumen;

c. Section line (arterial) - 30,000 Lumen; and

d. Principal arterial and parkway - 50,000 Lumen.

2. Luminaire mounting height; and

3. City of Apache Junction Standard Detail number.

(e) SRP will inform the developer of contribution costs which developer shall pay. Upon receipt of notice from SRP that the developer has paid the cost of the streetlights and construction to SRP, the city engineer will authorize construction and accept future energy and maintenance costs.

(f) SRP and the developer shall notify the city engineer when they are ready to install the streetlights as development construction proceeds. The city engineer will inspect the streetlights and accept the installations along with other required off-site improvement.

(g) The city engineer will accept the future energy billing.

(4) *Commercial project and subdivisions with private streets or no interior public streets.*

(a) From development site plan, the developer's engineer shall locate streetlights along adjacent public streets.

(b) The developer shall provide the drawings showing the approved lights to the city and SRP.

(c) Upon receipt from SRP, if underground conduit is required, it will be provided at the developer's expense.

(d) The developer will provide payment for the streetlight costs to SRP, or they will hire a private contractor to install the lights, with the approval of installation from SRP.

(e) The city will transmit a letter to SRP authorizing work to begin and stating the city will accept future energy and maintenance costs.

(f) The city will inspect the streetlights and accept the installations along with other required off-site improvements at the time of certificate of occupancy.

(5) *Subdivision with public streets.* See Subdivision Regulations, A.J.C.C., Vol. II, §§ 2-5-2, 2-5-5 and 2-5-6.

(a) The intent of this requirement is to create a street light improvement district with boundaries similar to a development containing interior and perimeter public streets.

(b) The process will be initiated by a receipt of a unanimous petition for street lighting from the owner of the land to be developed.

(6) *Process to create a streetlight improvement district in developed areas.*

(a) To obtain streetlights in a developed neighborhood, a Street Lighting Improvement District ("SLID") should be formed. The following list provides options available to initiate action.

1. Representative(s) of the property owners make the request;

2. A majority petition signed by property owners, is submitted and verified; and/or

3. A unanimous petition signed by all the property owners is submitted and verified.

(b) The steps required in the procedure are listed below and each action listed is handled by the city engineer after receipt of a properly executed request or petition:

1. Prepare streetlight district boundaries;

2. Determine the location of lights to be installed;

3. Obtain cost estimates from SRP;

4. Council acts on resolution of intention;

5. Public notice is given (i.e., advertised and posted on the property as per A.R.S. Title 48);

6. A 30-day protest period is provided;

7. Protest hearing and ruling by council (if applicable);

8. Council considers resolution ordering work;

9. Letter to SRP authorizing construction and providing funds;

10. Utility schedules work and coordinates installation of underground conduit;

11. City accepts improvements;

12. City informs county assessor of district charges; and

13. County collects charges each year with annual tax assessments.

§ 10-3-7 CONSTRUCTION.

(A) All construction shall conform to the latest MAG Standard Details and MAG Standard Specifications together with the Apache Junction Supplement to MAG and to the Apache Junction Standard Details.

(B) A right-of-way encroachment permit is required for all work within the city right-of-way.

(C) A 100% performance bond or equivalent, acceptable to the city, is required for all work within the city right-of-way.

(D) All contractors working within the city right-of-way shall have a current Apache Junction business license, proof of current insurance, and be subject to applicable tax laws. The certificate of insurance shall also list the city as an additional insured party.

(E) All work within the city right-of-way shall be inspected and approved by the city engineer.

(F) All newly constructed public ways shall be kept barricaded and access denied to the public until such public way is accepted by the city and all permanent traffic control devices are installed to the approval of the city.

(G) A dust control permit is required from Pinal County.

§ 10-3-8 ENGINEER REPORTS.

(A) *Preliminary design report for development.* A preliminary design report shall be submitted prior to or at the time of preliminary plat submittal. At a minimum, the preliminary report must address the following subjects:

(1) Vehicle trip generation;

(2) Roadway classification;

(3) Design speeds;

(4) Auxiliary and additional lane requirements;

(5) Parking requirements;

(6) Pedestrian, bicycle and equestrian requirements; and

(7) Special features and their influence.

(B) *Traffic impact.* Developers are responsible for submitting a "Traffic Impact Analysis for Proposed Development," as outlined in ADOT Publication 35-209, and a traffic circulation study.

(C) *Design study report.*

(1) Developers are responsible for submitting a design study report to validate the design shown on the construction plans. The report shall briefly describe the basis of the design and the assumptions made and explain special solutions to problems encountered.

(2) The following sections shall be contained in the report.

(a) *Soils report.* A soils report shall be submitted with new street construction plans indicating "R" value, sieve analysis, plastic index of the sub-grade, and street structural cross-section design.

(b) *Drainage report.* A drainage report shall be submitted with new street construction plans and/or the grading plans. This report shall be prepared per A.J.C.C., Vol. II, Article 10-4 of this chapter.

(c) *Pavement evaluation report.*

1. A pavement evaluation report shall be submitted with new street construction plans when it is proposed to match existing pavement. The design engineer is responsible for investigating and evaluating the existing pavement structure.

2. If the existing pavement does meet requirements, it may be matched by trimming a minimum of two feet for a longitudinal match, or a perpendicular match. Exact point of matching and method of trimming (saw cut or wheel cut) shall be determined in the field by the city engineer.

(d) *Other details.* Supplemental sketches, details, calculations and design rationale to support and justify engineering design shall be provided as needed and as requested by the city engineer.

ARTICLE 10-4: STORMWATER MANAGEMENT

Section

10-4-1 Introduction
10-4-2 Stormwater standards
10-4-3 Stormwater Master Plan
10-4-4 Stormwater Plan and drainage reports
10-4-5 Hydrology
10-4-6 Street drainage; flow
10-4-7 Storm drains
10-4-8 Open channels
10-4-9 Culverts and bridges
10-4-10 Detention or retention facilities
10-4-11 Drainage easements and covenants
10-4-12 Construction and inspection
10-4-13 Floodplain management
10-4-14 Other permits and requirements
Exhibit 10-4.1, Drainage and Retention Agreement (Sample)
Exhibit 10-4.2, Drainage and Retention Certification Letter (Sample)

§ 10-4-1 INTRODUCTION.

This article has been prepared as a guide for preparation of plans for stormwater drainage systems to be installed within the City of Apache Junction. This Article along with the city's *Standard Details,* the Maricopa Association of Governments ("MAG") *Standard Specifications and Details,* and the publications *Drainage Design Manual for Maricopa County, Arizona,* Volume I, *Hydrology* and Volume II, *Hydraulics* by the Flood Control District of Maricopa County ("FCDMC") should provide all of the information needed for plan preparation. The *Drainage Design Manual for Maricopa County, Arizona,* Volume I, *Hydrology* and Volume II, *Hydraulics* have been adopted by the city as a basis for design guidance and criteria, except as amended herein.

§ 10-4-2 STORMWATER STANDARDS.

The city requires that stormwater runoff for new commercial, industrial, multi-family and residential developments be managed as follows:

(A) *Retention.* The required retention to be contained is the stormwater runoff per divisions (A)(1) and (2) below. Half pavements of the adjoining streets may be considered part of the development.

(1) For the areas north of Baseline Avenue, the following retention requirement shall apply:

One hundred ten percent of the stormwater which falls within the development from a 10-year storm of 24-hour duration (approximately 2.4 inches) of which the difference between the natural runoff and the developed runoff must be retained within the boundaries of that development (including street areas if within a subdivision) (see A.J.C.C., Vol. II, § 10-4-10(B)(1) and (2)).

(2) For the areas south of Baseline Avenue, the following retention requirement shall apply:

Stormwater which falls within the development from a 100-year storm of 2-hour duration (approximately 3.0 inches) must be retained within the boundaries of that development (including street areas if within a subdivision) (see A.J.C.C., Vol. II, § 10-4-10(B)(1) and (2)).

(3) Surface retention is allowed in all newly developed areas.

(4) Underground retention is only allowed in commercial and industrial areas.

(B) *Streets.*

(1) *Ten-year stormwater runoff.* Streets must be constructed to carry the stormwater runoff from a 10-year storm event as follows:

(a) For local streets, there shall be no curb overtopping with no requirements for dry lane conditions.

(b) For collector, arterial and parkway streets, there shall be at least one dry 12-foot driving lane in each direction.

(2) *One hundred-year stormwater runoff.*

(a) Calculated peak flow shall be considered to be contained within the right-of-way with:

1. Six-inch maximum depth over the curb;

2. One hundred cfs maximum flow; and

3. Ten fps maximum velocity.

(b) See A.J.C.C., Vol. II, § 10-4-6 for the street drainage design guide.

(3) *Runoff in excess of street capacity.* When the stormwater runoff in the streets exceeds the 10-year or 100-year conditions stated in divisions (B)(1) and (2) above, the excess flows shall be contained in an approved storm drain and/or channel system. No open channels are allowed in the city's right-of-way.

(4) *Inverted crown streets.* No new inverted crown streets are allowed within the city limits.

(5) *Street cross drainage.* Cross drainage shall be underground with culverts and bridges. Low water crossings shall not be used without the city engineer's approval.

(C) *Off-site flows.*

(1) Off-site flows are flows that originate upstream of the proposed land development site and have historically traversed either through the site or have been channelized in some form adjacent to the project.

(a) Land development projects are required to convey the 100-year, time of concentration (Tc) peak flows around or through the project site. These off-site flows shall be interpolated from Apache Junction's Stormwater Master Plan report.

(b) Off-site flows shall not be mixed with any stormwater flows originating from within the project's contributing drainage area unless specifically approved by the city engineer.

(c) Off-site flows shall be carried through the development and discharged at a location and in a manner consistent with historical flow patterns without adverse impact to adjacent, upstream or downstream properties.

(d) Storm drains or box culverts shall be required when off-site flows are discharged from a development site into public right-of-way. See A.J.C.C., Vol. II, § 10-4-7 for additional information.

(2) Note that "off-site flows" does not include the stormwater runoff from adjacent public right-of-way that the project must retain in accordance with division (A) above.

(D) *Special Flood Hazard Area (FEMA designated area).* Any development or construction within a special flood hazard area shall conform to FEMA flood plain development requirements and to the requirements of the latest city floodplain management ordinance. See A.J.C.C., Vol. II, § 10-4-13 and A.J.C.C., Vol. II, Chapter 5.

(E) *Conditions for developing property in flood areas.*

(1) (a) Existing washes are not to be filled or altered without a city-approved engineering study. Existing washes can be relocated on-site based on a city-approved engineering study showing adequate capacity and slope for the relocated washes. The washes must enter and leave the subject property in the historic locations. This shall apply to the following lands within the corporate limits of the City of Apache Junction, including but not limited to:

1. All special flood hazard areas as defined by FEMA;

2. FEMA zone X-500, also known as Shaded Zone X, as it pertains to alluvial fan or sheet flooding;

3. Local floodplains associated with washes and/or sheet flow having a 100-year peak discharge of 50 cfs or more;

4. Areas within the erosion hazard setback of a watercourse;

5. All floodplains/flood-prone areas and erosion hazard setbacks identified on previously and subsequently recorded subdivision plats; and

6. All floodplains/flood-prone areas and erosion hazard setbacks identified on previously and subsequently drainage studies commissioned by the city engineer.

7. Any ephemeral natural watercourses that convey runoff during rain events.

(b) For the purpose of this section, the following definition shall apply unless the context clearly indicates or requires a different meaning.

FLOODPLAIN or ***FLOOD- PRONE AREA.*** Any land area susceptible to being inundated by water from any source. For regulatory purposes this involves either a FEMA Special Flood Hazard Area, areas platted on accepted city plans as being flood-prone or areas near washes which in the opinion of the Floodplain Administrator may be impacted by water during a base flood.

(2) It is unlawful to divert, obstruct or retard a watercourse. Affected agencies or persons may seek legal action.

(3) Construction in designated flood zones.

(a) Construction in an AH designated flood zone, as shown on the FIRM, requires an existing site topography be prepared by a State of Arizona registered land surveyor and a city-approved engineered grading plan. The lowest floor, garage and equipment is to be designed to be at least one foot (State of Arizona regulatory flood elevation ("RFE") above the base flood elevation ("BFE")). Certification by a State of Arizona registered civil engineer stating that the development will not raise the base flood elevation more than one foot is required.

(b) A subdivision of five or more acres or 50 or more lots located all or partially in an A designated flood zone shall have the base flood elevations determined for the A Zone. The base flood elevations may extend outside the A Zone and the limits of the base flood elevations shall be shown on the grading and drainage plan of the subdivision. The lowest floor, garage and equipment is to be designed to the RFE.

(c) When constructing in an A designated flood zone, without designated floodway and base flood elevations determined, the lowest floor of a structure shall be a minimum of two feet above the highest adjacent grade ("HAG") at the pad location of the structure.

(d) Construction in an AE designated flood zone where the floodway and base flood elevation is determined, the lowest floor of a structure to be constructed outside the floodway shall be a minimum of 1 foot RFE above the base flood elevation shown on the FIRM.

(e) Construction in Flood Zones A and AE will allow fill dirt to be imported to the site with a city-approved engineered grading plan. A city excavation and grading permit shall be required.

(f) After construction of the building and after all machinery and/or equipment such as water heaters, air conditioners and other associated equipment have been installed and the grading around the building is completed, a State of Arizona registered land surveyor or a registered engineer shall file a finished construction FEMA elevation certificate for city files.

(4) Any grading resulting in alteration of floodwater capacity or re-alignment of a flood area in an A Zone area may require an Army Corps of Engineer's 404 Permit and/or FEMA approval.

(5) Manufactured homes shall be elevated so that the bottom of the structural frame or the lowest point of any attached appliances (e.g., ground-mounted AC unit), whichever is lower, is at or above the regulatory flood elevation and be securely anchored to an adequately anchored foundation system to resist flotation, collapse or lateral movement.

(6) Nonresidential buildings constructed in any A Flood Zone are to be elevated or floodproofed to one foot above the base flood elevation or higher. A certification by a State of Arizona registered civil engineer is required stating that the development grading and building will not raise the base flood elevation more than one foot. An as-built FEMA elevation certificate prepared by a State of Arizona registered land surveyor or registered engineer is also required.

(7) Constructing buildings on posts or pilings does not remove the building from the Special Flood Hazard Area for flood insurance purposes. The posts or pilings are to be designed to resist lateral movement due to forces of the floodwaters.

(8) Construction is prohibited in floodways unless it has been determined by a State of Arizona registered civil engineer that construction will not increase flood levels during the occurrence of the base flood discharge by any amount. Construction in the FEMA floodways as indicated on the area FIRM map requires that there be no rise in the 100-year flood elevation and certification letter by a State of Arizona registered civil engineer to this. The work may require an Army Corps of Engineers 404 Permit and/or approval of FEMA.

(9) Waste disposal systems cannot be installed wholly or partially in a floodway.

(10) Removing a property from a FEMA flood zone requires a State of Arizona registered civil engineer to process a request in accordance with FEMA procedures.

(11) The city's floodplain management ordinance set forth in A.J.C.C., Vol. II, Chapter 5 should be consulted for further information.

(F) *Stormwater collection and retention plan.* A conceptual stormwater collection and retention plan and a preliminary drainage report shall be submitted to the city with a preliminary plat or site development plan, and shall be approved prior to the approval of the plat or plan. Drawings, plats, plans and the like shall comply with the city standards, set forth in A.J.C.C., Vol. II, § 10-4-4(A).

(G) *Drainage report.* A drainage report shall be submitted to the city wherever development and/or grading is proposed within the city limits. ***DEVELOPMENT*** shall mean any man-made change to improved or unimproved real estate, including but not limited to buildings or other structures, mining, dredging, filling, grading, paving, excavation or drilling. See A.J.C.C., Vol. II, § 10-4-4(B).

§ 10-4-3 STORMWATER MASTER PLAN.

The city's "City of Apache Junction Stormwater Master Plan," dated January 2002, shall be used as the basis for any off-site drainage flows. This Master Plan can be viewed at the city engineer's office and is available in electronic format on the city's website.

§ 10-4-4 STORMWATER PLAN AND DRAINAGE REPORTS.

(A) *Stormwater Collection and Retention Plan.* The Stormwater Collection and Retention Plan shall include but not be limited to the following:

(1) The watershed boundaries, both on-site and off-site, shall be delineated with any existing drainage or irrigation structures such as waste or delivery ditches, natural drainage channels and the like, and the proposed development's impact on existing features;

(2) A topographic map which shows the location of the project area; a one- or two-foot contour interval shall be used as the base map for both existing and proposed. The map shall also show the location of the property with respect to the street system and other features such as existing and proposed stormwater retention basins and the like;

(3) Method of collection (surface and/or subsurface);

(4) Depth, side slopes and volume of retention basins;

(5) Calculations showing retention required and provided;

(6) Method of disposal of water within 36 hours;

(7) Areas tributary to each retention basin;

(8) The development's low outfall elevation and location relative to city datum shall be explained and the location on all watershed and topographic maps shall be identified.

(9) The drainage pattern of all streets within and adjacent to the proposed development on the drainage maps shall be indicated.

(10) A preliminary retention basin plan including size, depth and possible methods of draining the retention basin shall be proposed.

(11) Areas within any 100-year floodplain including any FEMA designated floodplain shall be indicaed; and

(12) All stormwater plans and preliminary drainage reports shall be prepared and signed by a professional civil engineer who is registered by the State of Arizona.

(B) *Drainage reports.* Drainage reports shall be submitted for approval by the city with the site improvement plans. The report shall be typewritten on letter-size sheets with necessary maps folded and inserted into the report in the proper order. All drainage reports shall be prepared and sealed by a qualified professional civil engineer registered in the State of Arizona. All elevations shown on the plans shall be referenced to a benchmark on the city datum unless otherwise approved by the city engineer.

(1) *Preliminary drainage report.* A preliminary drainage report shall be required for all commercial, industrial, multi-family and residential subdivision developments. The report must be presented with preliminary development plans. Complete engineering reviews shall not occur without this report, which shall be on separate, letter-size, typewritten sheets with necessary maps and attachments. Handwritten comments on a plan sheet are not acceptable and shall be returned unapproved. The preliminary drainage report shall include, but not be limited to:

(a) Adequate maps that delineate the boundaries of on-site and off-site drainage areas;

(b) Maps or drawings that indicate the drainage pattern of all existing drainage, irrigation, structures, streets and the like, and proposed streets and building sites. The different critical points and where inlets/outlets are to be located shall be labelled. The inlets/outlets are to have the same numbers as the drainage areas draining to them;

(c) Each sub-area is to be analyzed for the peak flow generated by a 10-year and 100-year storm. Use of the rational method is preferred for drainage areas less than 160 acres. Hydrology and hydraulics design methods shall be consistent with the Maricopa County *Drainage Design Manual,* Volumes I, II and III;

(d) Storm drain design computations;

(e) Inlets shall be analyzed separately and catch basin computations shall be submitted;

(f) The off-site storm runoff flows shall be described in detail. Drainage area, calculated peak flows, and other pertinent runoff data must be clearly set forth. If the flow is in a defined channel, the channel can be improved. An 8-foot bottom to accommodate maintenance vehicles may be required. Special consideration of the use of open channels is to be given on each individual project by the city. Channels for the runoff from areas outside the development may be realigned through the new development. Special precautions at the point of discharge for flow rate, velocity, erosion and sedimentation shall be evaluated to prevent adverse effects on downstream properties;

(g) The retention volumes required by the formula:

Drainage area (square feet) x drainage area coefficient (C) x 0.2 x 1.1 (freeboard) = retention volume in cubic feet; and

(h) Proposed retention basin location(s), size(s) and means of stormwater conveyance and disposal shall be shown on the drainage map(s). Narrative discussion and supporting calculations shall be provided in the body of the report.

(2) *Final drainage report.* A final drainage report shall be required and accompanied with the drainage and retention agreement (Exhibit 10-4.1, following the text of this Article) to be recorded. The final drainage report shall include but not be limited to:

(a) Cover sheet.

1. With submittal number, name and address of project, parcel or development for which the report is submitted;

2. Name, address and phone number of engineer and property owner; and

3. Seal, signature and date of State of Arizona professional civil engineer.

(b) A narrative with topographic maps that describe the location and condition of the property the project is located on (on-site conditions); and the upstream (off-site) watersheds as well as any downstream constraints which affect the property;

(c) calculations demonstrating required retention volume, tributary areas to each basin and volume provided and basin grades, depth, high water elevation, pipe invert elevations, basin outfall elevation and side slopes;

(d) retention basin percolation test results;

(e) elevation and location of low outfall elevation for the development, sub-area or site improvement;

(f) explanation of the effect of a basin overflow due to back-to-back storms or a storm greater than the design storm;

(g) street capacity calculations for the 10-year and 100-year storm;

(h) time of concentration calculations;

(i) storm drain piping and catch basin hydraulic calculations, including the hydraulic grade line ("HGL");

(j) the routing of off-site flows through or around the proposed development;

(k) the city datum benchmark to which all site and facility elevations are referenced;

(l) tailwater and backwater elevations at all culverts;

(m) finished floor elevations of all structures;

(n) method of disposing of retained stormwater within 36 hours, and provide shallow pit percolation test results and calculations;

(o) inflow and outflow points at retention/detention basins and culverts;

(p) points of concentration and intake point for catch basins, scuppers, channels and street intersections;

(q) calculations of the retention basin(s) drain time, the number of drywells per city criteria and percolation test results;

(r) drainage report based upon computerized hydraulic models with all values and variables identified in the report. Software manuals and documentation shall be made available upon request by the city;

(s) Long-term maintenance responsibility shall specify the name, address, and phone number(s) of the person(s), firm(s) or agency responsible for ownership, operation, liability and maintenance of drainage improvements. Other documents where these responsibilities are documented (i.e., CCRs, final plats and the like);

(t) Catch basin V-depth calculations; and

(u) All hydrology and hydraulic calculations as required by the city that includes a summary of the following of each drainage area:

1. retention required and provided;

2. street capacity and depths; and

3. catch basin and storm drain pipe capacity, HGL and velocities.

§ 10-4-5 HYDROLOGY.

(A) *General comments.* This section describes the city's policies concerning hydrologic analysis procedures to be used in the city for the planning and design of drainage and flood control facilities and the preparation of accompanying drainage reports. This section contains recommended procedures, equations, data and basic assumptions which the planner or designer is generally required to use. If a situation is encountered in which the use of other methods or data in addition to or instead of these are believed to be more appropriate, then the city engineer should be consulted and advance approval must be received before using them. When methods or data not described in this Chapter are used, the drainage report must include enough information to enable the city engineer to fully evaluate the applicability of the methods and data.

(B) *Basis of design.*

(1) The *Drainage Design Manual for Maricopa County,* Volume I, *Hydrology,* Section 3, Rational Method, shall be used to determine peak discharges and volumes for design purposes for small, uniform, regularly shaped watersheds less than 160 acres.

(2) The Corps of Engineers' HEC-1 or HEC-HMS computer modeling is required for small watersheds that are non-uniform, irregular in shape, when routing of flows are necessary, or for areas larger than 160 acres.

(C) *Study requirements.* A hydrology study shall be performed for each development within the city. The study shall define the overall and sub-drainage areas. It shall also determine appropriate hydrologic data for the following:

(1) *Off-project areas.* The drainage flows for each off-project drainage area tributary to the project shall be computed and submitted in summary form. These off-site flows will be based on the City of Apache Junction Stormwater Master Plan dated January 2002 (adopted in A.J.C.C., Vol. II, § 10-4-3) or from consultant's computations where the Master Plan does not cover.

(2) *Project sub-basins.* The project shall be divided into sub-basins tributary to appropriate design points. The pertinent hydrologic data shall be computed for each and submitted in summary form.

(3) *Appropriate design points.* ***APPROPRIATE DESIGN POINTS*** are those points wherein the peak flow rates, or other pertinent data, are needed to determine flow capacity requirements, inflow-outflow relationships and the like. These points would include but not necessarily be limited to the following: inflow-outflow points of retention/detention basins, up and/or downstream ends of culverts; intake points for storm drains (e.g., inlets, catch basins, scuppers and the like); points immediately upstream and downstream of channel junctions and/or street intersections; others as may be necessary to give a complete hydrologic picture and allow a thorough hydraulic evaluation and/or design of the drainage system.

§ 10-4-6 STREET DRAINAGE; FLOW.

(A) For street flow, the street drainage criteria of Section 3 of the *Drainage Design Manual for Maricopa County,* Volume II, *Hydraulics* shall apply except as amended herein. The Rational Method shall be used to calculate street runoff as stated in A.J.C.C., Vol. II, § 10-4-5(B) of these standards.

(B) Calculations shall be submitted which indicate compliance with the criteria as stated in A.J.C.C., Vol. II, § 10-4-2(B) of these standards.

(C) A seven-inch curb may be allowed to increase the street capacity and eliminate the need for storm drains and may only be used for short sections of streets near drain inlets with the approval of the city engineer.

§ 10-4-7 STORM DRAINS.

Where the peak flows exceed the capacity of the public street to convey the peak flows, storm drains shall be installed and sized to carry the excess flows (e.g., when the 10-year peak exceeds the spread criteria or exceeds the curb capacity of the public street or when the right-of-way cannot convey the 100-year peak storm within the constraints of A.J.C.C., Vol. II, § 10-4-2 of these standards). All storm drains within a development will outlet into on-site retention/detention basins, on-site channels or off-site channels, washes or storm drains.

(A) *Storm drain hydraulics.*

(1) Hydraulic calculations shall be prepared as indicated in the FCDMC Hydraulic Manual, Section 4, with the following modifications:

(a) Storm drain piping shall be sized to carry the excess runoff to meet the street flow criteria described in A.J.C.C., Vol. II, § 10-4-2 of these standards.

(b) Where a storm drain is the sole flow path to a retention basin from a development or site, the storm drain shall be sized to carry the 100-year storm peak flow rate.

(c) The hydraulic grade line ("HGL") may be above the pipe, provided that it remains at least one foot below the ground elevation at all manholes, catch basins, inlets and the like.

(2) Calculations for establishing the HGL for storm drainage catch basins, pipes, and structures are to be submitted with the engineering improvement plans. The HGL shall be shown on storm drain piping profile drawings, including catch basin runs.

(B) *Storm drain main.*

(1) *Location.*

(a) The alignment of a storm drain is normally within the pavement area of a public street other than principal arterials and parkways unless otherwise approved by the city engineer.

(b) The storm drain should not normally cross the centerline of the public street, nor cross under curb lines, sidewalks, driveways and the like.

(c) Public storm drains located outside of public right-of-way shall be centered within a 20-foot drainage easement.

(2) *Pipe size.*

(a) The minimum pipe size of the lateral collector shall be 15-inch ID, and the minimum pipe size of the main is 18-inch ID.

(b) At changes in pipe size, the crowns of the pipes shall match.

(3) *Depth.* Storm drains located within public rights-of-way shall comply with the following:

(a) Consideration shall be given regarding the depth of any manhole to be installed on a public storm drain in establishing the depth of the storm drain pipe. Shallow manholes shall be avoided and require approval by the city.

(b) The crown of storm drain pipes whether public or private shall not encroach or protrude into the pavement section of the public street (ABC base and surface courses of asphalt).

(c) The crown of storm drain culverts shall not normally encroach or protrude into the pavement section of public streets. With city engineer approval, the asphalt courses may be placed directly onto the concrete slabs of box culverts.

(4) *Direction changes.* When the pipe changes direction more than 30 degrees, there shall be a drop between match points of at least 0.1 feet. In no case shall the deflection angle be greater than 90 degrees. Manholes shall be required at all storm drain pipe direction changes.

(5) *Separation of storm drain pipe from water and sewer lines.*

(a) Horizontal separation of storm drains and water or sewer lines shall be a minimum of six feet, outside of pipe to outside of pipe.

(b) Vertical separation of storm drains and sewers should be two feet (sewer below) unless the sewer line is manufactured from ductile iron with mechanical joints or equal.

(c) Vertical separation of storm drain and water line (water line below) shall be two feet clear.

(d) Separation is measured from the outside of the two pipes.

(6) *Velocity.* The velocity of stormwater flowing within public storm drains shall be in the range of two feet per second (2 fps) to ten feet per second (10 fps).

(7) *Pipe classification.*

(a) The minimum D-load class specification shall be Class 3 or the actual installation requirement, whichever is greater.

(b) Trench loading calculations shall be provided upon request during the plan review process.

(c) The civil engineering improvement plans shall clearly identify the class of the pipe for all storm drains, whether public or private within city right-of-way.

(8) *Pipe materials.* The following materials are acceptable for constructing conveyance components of publicly maintained storm drains within the city:

(a) *RGRCP.* Rubber gasket reinforced concrete pipe ("RGRCP") conforming to Section 618 of the Uniform Standard Specifications as published by MAG.

(b) *RCP.* Reinforced concrete pipe ("RCP") is approved for storm drains 36 inches or larger. RCP shall conform to Section 618 of the MAG Uniform Standard Specifications.

(c) *CIPP.* Cast-in-place pipe ("CIPP") conforming to Section 620 of the MAG Uniform Standard Specifications is subject to the following.

1. CIPP generally should not be placed under a road bed. The city engineer must grant specific approval for the installation of CIPP. Letters of request shall include a justification statement and shall be submitted to the public works department – engineering division for processing.

2. Minimum size shall be 36 inches.

3. A soils report shall be provided that confirms that soil conditions are adequate for the installation of CIPP.

4. The hydraulic gradient for the design events shall be kept within the pipe.

5. Details of the CIPP shall be prepared for and approved by the city engineer.

(d) *Other pipe.* Where a lateral conveyance is not subject to pavement loading from public streets (e.g., laterals directly from inlets into a retention basin), the following pipe materials may be used with prior approval from the city engineer.

1. Polyvinyl chloride ("PVC") SDR 35 or greater conforming to Section 745 of the MAG Uniform Standard Specifications.

2. High density polyethylene ("HDPE") conforming to Section 738 of the MAG Uniform Standard Specifications.

(e) *Restricted material usage.* The following materials are not approved for use in constructing storm drains located within City of Apache Junction right-of-way, but are approved for culvert crossings with the approval of the city engineer:

1. Corrugated metal pipe ("CMP"); and

2. Corrugated metal pipe arch ("CMPA").

(f) *Alternative materials.* Other materials for public stormwater conveyance may be considered on a case-by-case basis subject to the following:

1. A written request to the city engineer detailing the justification for the use of alternative materials; and

2. The request shall be made through the public works department – engineering division.

(9) *Pipe compaction methods.* Mechanical compaction methods are required. No jetting or flooding shall be allowed within the city right-of-way without mechanical compaction.

(C) *Storm drain inlets.* Inlets are those drainage structures that are placed and sized to intercept stormwater flows and direct those flows into a conveyance.

(1) Inlets that have been approved for use within public right-of-way or publicly maintained areas are:

(a) Inlets constructed in accordance with MAG Standard Details 533 (Type "D"), 534 (Type "E"), 535 (Type "F"), all modified with an 18-inch sump area below the invert of the pipe as shown in Apache Junction Standard Detail AJ-533-1M.

(b) Scuppers constructed in accordance with MAG Standard Detail 206-1. No metal tops are allowed.

(c) Projects that are being developed adjacent to existing public streets in which a scupper type inlet exists to direct street runoff onto the project site are required to remove and replace the existing scupper with an approved inlet unless otherwise approved by the city engineer.

(d) Inlets that provide an "access" opening into the box are prohibited. All access openings shall be through the grate.

(e) Slotted drains are not allowed within the city right-of-way unless prior approval is given by the city engineer.

(f) Other inlet types with the appropriate justification may be approved on a project-by-project basis.

(g) MAG Standard Detail 535 (Type "F") cannot be constructed fully or partially in sidewalk areas.

(2) Inlet capacities on public streets shall be calculated in accordance with:

(a) The *Drainage Design Manual for Maricopa County,* Volume II, *Hydraulics;* or

(b) The Federal Highway Administration's ("FHWA") Hydraulic Engineering Circular Number Twelve ("HEC" 12), "Drainage of Highway Pavements."

(c) The engineer shall make allowances for clogging of the inlet structure.

(3) Inlets within public right-of-way shall not be placed or connected in series unless approved by the city engineer.

(4) The minimum horizontal distance between inlets within public right-of-way is 30 feet.

(D) *Storm drain laterals.* The portion of the conveyance that connects the inlet structure to the storm drain mains or to an outlet structure is considered a lateral pipe. Laterals within the public right-of-way shall conform to the following:

(1) Minimum diameter is 15 inches when the lateral is subject to traffic loading forces or may be 12 inches when not subject to traffic loading forces and approved by the city engineer (e.g., equalization pipes and the like).

(2) The crown of the lateral pipe shall not encroach or protrude into the public street pavement section (ABC, base or surface asphalt courses).

(3) See division (B)(8) above regarding acceptable materials for lateral pipes that are located within public right-of-way.

(4) The connection of the lateral pipe to the main pipe(s) of the storm drain shall be per MAG Standard Detail 524 or via a prefabricated tee component.

(5) The minimum D-load classification for lateral pipes shall be Class 3 or the actual installation requirements, whichever is greater.

(E) *Manholes and structures.* Manholes or junction structures shall be provided on public storm drains to facilitate maintenance in accordance with the following:

(1) *Locations.* Manholes and/or junction boxes are required at all of the following:

(a) Junctions of two or more pipes;

(b) Changes in grade;

(c) Changes in alignment; and

(d) Changes in pipe sizes (pipe crowns to match).

(2) *Spacing.* The maximum spacing for manholes shall be:

(a) Four hundred feet on lines 18 inches to 36 inches inside diameter; and

(b) Six hundred sixty feet on lines greater than 36 inches inside diameter.

(3) Manhole construction standards on public storm drains shall comply with the following table:

Table 10-4.1
Manhole Construction Standards

Manhole	***Pipe Size***	
	≤ 48 in.	***≥ 51 in.***
	MAG Standard Detail	
Base	520	521
Shaft	522	522
Frame and Cover	424 (30 in.)	424 (30 in.)

(F) *Storm drain outlets.* Structures that are located at the downstream terminus of storm drain laterals or mains are classified as outlets. Storm drain outlets that are located within public right-of-way or areas that are subject to maintenance by the city shall comply with the following:

(1) Concrete headwalls shall be installed on 12-inch and larger pipes per MAG Standard Detail 501-4 or an equivalent.

(2) Access barriers shall be installed on the outlets of 12-inch or larger pipes.

(3) Erosion protection shall be provided as necessary.

(4) Safety railing shall be installed on headwalls that, from the top of the headwall to the floor, are 18 inches and greater in height and are 24 inches horizontally, or less, to a public sidewalk per MAG Standard Detail 145.

§ 10-4-8 OPEN CHANNELS.

(A) *Natural channels.* Whenever possible and appropriate existing natural drainage channels must be preserved in their natural state. When this is the case, a drainage easement or right-of-way shall be dedicated over the 100-year floodplain of the natural drainage way.

(B) *Man-made channels.* When man-made channels are required, the emphasis would be placed on a "natural" appearance. Side slopes 6:1 or flatter is preferred with "natural" vegetation planted per the city's parks and recreation department requirements and approval.

(1) *Design criteria.*

(a) *Open channels.* Open channels are not allowed in the city right-of-way. Open channels shall be designed to convey at least the 100-year peak discharge within the main channel.

(b) *Channel details.* Channel lining, freeboard, toe protection, under drains, design velocity, drop structures and the like shall be as shown in the FCDMC *Drainage Design Manual,* Volume II, *Hydraulics.*

(c) *Hydraulic capacity.* The capacity of the drainage channel shall not be impeded or diminished by the lining or landscaping materials. The conveyance of the historical flows ("Q" values) shall be substantially maintained.

(d) *Maximum velocities/erosion protection.* In general, the maximum velocity shall not exceed the scouring velocity of the soil (with natural cover). When the scour velocity is exceeded, additional erosion protection shall be provided. The protection may consist of one or more of the following:

1. Concrete/shotcrete lining reinforced with 12 gauge, four-inch by four-inch welded wire fabric reinforcement;

2. Natural stone grouted rip-rap four-inch to 12-inch diameter stones - leave a minimum 1/4 diameter exposed, maximum 1/2 diameter exposed;

3. Check dams at three-foot elevation intervals; or

4. Dumped rip-rap of sufficient size and depth with calculations showing size and depth.

(e) *Side slopes.* Channels shall have side slopes that are approved by the city engineer.

(f) *Channel safety.* Channels adjacent to pedestrian walkways (which is not limited to concrete sidewalks), whether located within public right-of-way or on private property shall have safety hand railings per MAG Standard Detail 145 or an equivalent design.

(2) *Channel types.* The following types of channels are acceptable for use, and can be applied individually or in combinations.

(a) *Concrete lined.* Where used, these types of channels shall have a four-inch shotcrete or concrete lining reinforced with 12 gauge, four-inch by four-inch welded wire fabric reinforcement.

1. A natural coloring or additive may be allowed or required in some areas.

2. Landscaping adjacent to the channel on both sides is required.

(b) *Desert landscaped.* Where desired or applicable, landscaped channels can be constructed subject to the following:

1. Maintenance of the channel is considered (e.g., eight-foot bottom provided where necessary).

2. Side slopes can be landscaped with appropriate trees, shrubs and rock features which do not impede with the function of or the maintenance of the channel.

3. Appropriate roughness coefficients ("n" values) shall be used in sizing the channel.

4. Appropriate materials as approved by the city shall be used as a channel liner. The engineer shall take into consideration the potential for erosion and maintenance.

(c) *Soil cement lining.* The use of soil cement requires special approval by the city, and where approved, this type of channel shall utilize native soils to achieve an integral character with the surrounding area.

(3) *Dip sections.*

(a) The design of public streets to create a dip section in which to channelize the stormwater flows of the design storm across public streets is prohibited except where specifically approved by the city engineer and in the specially designated Rural Area (see A.J.C.C., Vol. II, Appendix 10-B).

(b) Existing dip sections on public streets that are subject to widening requirements associated with the development of adjacent properties are to be removed or modified.

1. Where the contributing stormwater flows to the existing dip section have been eliminated or reduced to discharges associated with Apache Junction's design storms and topography permits, the dip section shall be completely removed and the public street reconstructed.

2. Where topography or existing conditions do not permit the removal, the dip section shall be modified so that flows associated with Apache Junction's design storms and lesser events are conveyed via storm drain facilities and discharges associated with larger storm events would be allowed to flow across the modified dip section in the historic fashion.

(4) *Valley gutters.*

(a) Valley gutters shall be used to transport runoff across local streets when a storm drain system is not required. However, valley gutters are generally not acceptable for collector or arterial streets and may do so only with the approval of the city engineer.

(b) In unusual cases, valley gutters may be required to cross collector streets in which case a wider eight-foot design width shall be used and must be approved by the city engineer. Mid-block valley gutters should be avoided.

(5) *Maintenance.*

(a) *Access.* Open channels to be properly maintained should provide reasonable access for maintenance. Minimum width of access should be eight feet. Spacing between vehicular access points should be a maximum of 1/2 mile. A minimum of one access point per subdivision is required. Non-vehicular access points shall be provided every 660 feet maximum. If the facility is to be city-maintained, the above minimum requirements are mandatory.

(b) *Responsible party.* Maintenance of drainage facilities within the city is usually the responsibility of the property owner or the subdivision's homeowners' association. Specific maintenance responsibilities should be called out on the recorded plat and the grading and drainage plan.

§ 10-4-9 CULVERTS AND BRIDGES.

Cross street culverts and bridges shall be designed to the criteria in the following table:

Table 10-4.2
Culvert and Bridge Design Criteria

Street Classification	***Peak Frequencies***		
	10-Year	***50-Year***	***100-Year***
Local and Minor Collector	Runoff to be conveyed by culvert or bridge under road with no flow overtopping the road.	Runoff to be conveyed by culvert or bridge and by flow over the road with a maximum six-inch flow depth over the road.	Runoff to be conveyed by culvert or bridge and by flow over the road with a maximum 12-inch flow depth over the road.
Collector, Arterial and Parkway		Runoff to be conveyed by culvert or bridge under road with no flow overtopping the road.	Runoff to be conveyed by culvert and by flow over the road with maximum six-inch flow depth over the road. Minimum freeboard for bridges is two feet.

§ 10-4-10 DETENTION OR RETENTION FACILITIES.

(A) *Retention methods.* Allowable methods of providing stormwater retention are:

(1) *Surface storage.* Where surface storage (i.e., the traditional retention basin) of the required retention is planned or provided, the basin(s) shall comply with the following:

(a) *Irregular areas.* Retention is to be accommodated within a limited number of well-defined irregular shaped areas. Pursuant to the Apache Junction City Code, Vol. I, multiple small retention basins are not acceptable for either public or private developments unless approved by the city engineer for public developments and by the development services project engineer for private developments and are in conformance with city standards.

1. To count separate retention areas as one, they must have the same high water elevation and be connected by equalizer pipes.

2. On-lot retention is prohibited in all residential subdivisions.

3. Maximum depth of the required retention that shall be retained within a surface retention basin is three feet (see division (D)(1) below).

4. The high water elevation shall be lower than the adjacent grades of adjoining property unless an engineered berm is approved by the city.

(b) *Within city right-of-way or PUE.*

1. Retention facilities (surface basins, underground pipes, tanks and the like) are to be located within the private property or "on-lot" of the proposed land development. Right-of-way areas shall not be excavated, depressed or encroached upon without prior approval of the City of Engineer. When allowed, the retention facility shall conform to division (D)(1).

2. Retention area(s) including the high water elevation limits for the design storm can encroach into public utility easements ("PUE") subject to:

a. Adequate protection and cover is maintained for any existing public utilities.

b. Buoyancy calculations for the public utilities, whether existing or proposed, are required when the pipe diameter is larger than 16 inches.

c. Where wastewater manholes exist or are planned within the high water limits, the manholes shall have a watertight frame and cover per MAG Standard Detail 423, and the rim shall be higher than the high water elevation of the design storm.

(2) *Paved surface storage.* In commercial and industrial areas retention may be accomplished upon paved areas (e.g., impervious surfaces such as asphalt, concrete and the like). *See* division (E) of this section.

(3) *Underground storage.* Underground storage utilizes storage tanks, vaults, pipes and the like to place the required stormwater retention volume underground on the development site. Underground storage is allowed for commercial retail and industrial type projects only.

(a) The design engineer shall consider the following during the design process for any project involving underground storage:

1. Venting of the structure;

2. Access to the underground structure for routine maintenance;

3. Structural loads including any surface loads;

4. Buoyancy of the structure; and

5. Drainage of the structure within the required 36 hours.

(b) The engineer shall include in the drainage report for the project the justifications, design criteria, operational and maintenance information for the underground structure and any associated equipment such as pumps.

(c) *See* division (L) below for underground storage guidelines.

(B) *Sizing.*

(1) *Basis of design.*

(a) All retention/detention facilities shall be sized to retain the storm event falling over the entire project (gross area including streets) (see division (B)(2)(a) and (b) below). For the purpose of determining the volume required, the project shall be considered to extend to the centerline of all existing and/or future streets on the exterior boundaries and to include all interior streets and other rights-of-way within the project.

(b) There shall be a minimum of one foot freeboard from the water surface elevation to the lowest building elevation and/or the gutter of the upstream streets.

(2) *Volume required.* The volume required for each retention/detention basin shall be calculated as follows:

(a) *North of Baseline Avenue:*

$V_R = 1.1 \times 0.2 (Cpost - Cpre) \times A$

where:

V_R =Retention volume required (cubic feet)

1.1 = An additional 10% of retained volume to account for losses due to sedimentation, weed growth and the like

0.2 = 10-year, 24-hour depth of rainfall (2.4 inches/12)

Cpost = a coefficient relating the runoff to rainfall for the proposed construction (per FCDMC *Drainage Design Manual,* Volume 1, Table 3.2).

Cpre = a coefficient relating the runoff to rainfall for the existing condition (per FCDMC *Drainage Design Manual,* Volume 1, Table 3.2).

A = drainage area, including 1/2 of all abutting streets (square feet)

(b) *South of Baseline Avenue:*

V_R=0.25C x A

where:

V_R =Retention volume required (cubic feet)
0.25 = 100-year, 2-hour depth of rainfall (3.0 inches/12)

C = a coefficient relating the runoff to rainfall (per FCDMC *Drainage Design Manual,* Volume 1, Table 3.2).

A = drainage area, including 1/2 of all abutting streets (square feet)

Drywell volumes shall not be included in the proposed storage capacities.

(3) *Location.*

(a) Retention/detention basins shall be located such that they can intercept the flows from the entire site.

(b) If the basin is located other than at the lowest point of the project, the developer's engineer shall denote on the master drainage map the actual or effective drainage area. If portions of the project cannot drain to the primary basin, additional basins shall be added to retain runoff from these areas. Credit will not be given for providing volume in excess of that needed to retain the required storm event from a basin's effective drainage area.

(C) *Volume certification.* The developer will provide the city with certified as-built dimensions of the basins and the actual volume of storage provided. This must be based on as-built topographic surveys made by either a civil engineer or land surveyor who is registered to practice in the State of Arizona. These as-built volumes must reflect permanent finished landscaping in place. The volumes shall be certified by the design engineer that the volumes provided meet or exceed the required design volumes per city ordinance and the approved drainage plan. The volume of storage provided must equal or exceed the approved design volumes before the city engineer will issue letters of acceptance for maintenance of any public facilities.

(D) *Grading.*

(1) *Depths.*

(a) Retention basins are not permitted within the city ROW. Where unusual circumstances are encountered, retention basins may encroach in city ROW with prior written approval from the city engineer. When retention basins are allowed to encroach, the basins shall not extend more than 10 feet into the city ROW and shall not exceed 1.5 feet of water depth within the city ROW unless there is a fence or other similar protection to restrict access to the area.

(b) The overall average depth shall not exceed three feet without authorization of the city engineer. If granted, the basin must be fenced to prohibit access or a side slope of 8:1 shall be provided for a minimum distance of 25 feet measured from the 100-year high water level.

(c) While it is the city's intent that the "average" depth not exceed three feet, it is also the city's intent that the basins be contoured to present an aesthetically pleasing appearance as determined by the city engineer. Therefore, up to 25% of the bottom area may be up to four feet deep.

(d) In no case shall the depth exceed one foot without a positive means of disposing of accumulated runoff.

(2) *Slopes, side and bottom.*

(a) *Bottom.* The bottom of all basins shall be sloped towards the discharge points. The minimum bottom slope shall be 0.5%.

(b) *Side slopes.*

1. Side slopes adjacent to public rights-of-way, or when there is pedestrian type access to that portion of the basin, shall have a side slope of 6:1 or flatter.

2. Side slopes adjacent to walls, fences, hedges and the like (e.g., no or limited pedestrian type access in that area) may have side slopes up to 4:1.

3. Retaining walls (e.g., vertical slopes) may be used in areas adjacent to permanent walls, fences and the like.

(3) *Grading/landscaping/joint use as parks.*

(a) 1. It is the intent of the city that retention/detention basins present an aesthetically pleasing appearance. The developer's engineer shall contour the sides and bottoms of the basins to enhance appearance through varied slopes.

2. The developer and designer shall work with representatives of the city's development services department and parks and recreation department to determine the need/desirability and feasibility of joint usage of the basin as a park site. If appropriate, the design shall provide for appropriate open areas for the recreational facilities. All design shall be approved by the city parks and recreation department.

(b) It is not the intent of these standards to dictate the specific details of the configuration to the designers; however, the following concepts will be used as the basis of reviewing the plans:

1. curvilinear sides should be used in lieu of long stretches of straight lines.

2. side slopes should be varied (e.g., start with 6:1 then change to 7-8:1 or more. With appropriate use of landscaping, side slopes can even be reduced to 4:1.

3. bottom areas should contour to varying depths in lieu of uniform depth/slope.

(c) The tops and bottoms of side slopes shall be rounded off, generally over a distance of five feet each way of the curve point of intersection ("PI").

(d) All landscaping within city ROW, easements or dedicated tracts shall be approved by the city parks and recreation department.

(E) *Retention/detention in parking lots.*

(1) Retention/detention in parking lots of multi-family developments is not allowed. All retention/detention of such developments shall be in landscaped areas.

(2) Retention/detention of runoff in parking lots of industrial/commercial developments is allowed subject to the following guidelines:

(a) No more than 50% of the required storage volume may be retained/detained in parking areas. The balance shall be provided in landscaped areas. The tributary areas to each basin shall be noted on the master drainage map.

(b) No more than 50% of the required parking spaces shall be covered by stormwater retention/detention.

(c) Storage system shall be designed to store the first 30% of the required runoff volume off paved areas (to avoid nuisance water constantly ponding on the pavement).

(d) Depth of water shall not exceed six inches within the parking area, nor shall it exceed 0.15 feet at the midpoint of any parking space.

(e) Interference with pedestrian traffic will be minimized in the design of the storage facility.

(f) A continuous fire access lane shall be provided throughout the development, and it shall be free of ponded water from the retention areas.

(g) All parking spaces shall be accessible during periods when the basins are filled to capacity, without pedestrians having to cross ponded water deeper than 0.15 feet.

(3) Before final plan approval, an approved drainage report must show the calculated stormwater storage volume based on runoff from the 100-year, 2-hour storm, or the pre-approved 10-year, 24-hour storm for the Downtown Area and in-fill projects north of Baseline Avenue.

(F) *Overflow/outfall.*

(1) Each project shall be designed such that the "ultimate" outfall for all drainage in excess of the 100-year, 2-hour storm is routed to a public street, storm drain, drainage channel or natural watercourse. The outfall shall be accessible without draining over private property.

(2) If such an outfall does not exist, the project must provide an outfall.

(G) *Overflow/conveyance.*

(1) Off-project flows which historically flowed through the project may be routed through the project. Off-site runoff volumes shall not be allowed across private lots, streets or public/private access ways.

(2) Runoff volumes in excess of those required to be retained/detained may be routed directly through the outfall, although they shall be routed via the retention/detention facilities.

(H) *Location/conflicts with existing utilities.*

(1) Retention/detention facilities shall not encroach into existing easements for private utilities without written approval of the encroachment from all utilities using the easement.

(2) Retention/detention facilities shall not encroach into public ROW nor into public easements. If necessary, the developer shall relocate conflicting utilities into a new dedicated easement.

(3) The top of the retention/detention facilities (e.g., freeboard elevation) shall be at least four horizontal feet from any building or public roadway.

(4) Retention/detention facilities shall not be located within 20 feet of an active septic system nor within 100 feet of an active water well.

(5) A minimum three feet of cover (from the bottom of the basin to the top of the pipe) shall be maintained over water and sewer service lines.

(I) *Disposal/discharge.*

(1) All retention/detention facilities shall have a positive method of disposing of retained/detained runoff waters. All water so retained/detained shall be disposed of within 36 hours. Public streets are not considered an acceptable outlet for disposal of retained/detained runoff, however are considered an acceptable outlet for overflow. Only under special circumstances with prior city engineer approval should pump disposal methods be used.

(2) The minimum allowable pipe size for primary outlet structures is 12 inches. A headwall (MAG Standard Detail 501-4) and an access barrier shall be constructed at the outlet.

(3) Acceptable methods of disposal of accumulated stormwater runoff are:

(a) *Positive gravity outlet.*

1. *Surface infiltration.* A percolation test is required in each retention basin location to determine natural percolation. Test results shall be submitted to the city engineer for approval of the retention basin(s).

2. *Drywells.*

a. Drywells are permitted when no other means of disposal are available. Infiltration into the drywell cannot be considered to reduce the size of the retention area.

b. The property owner of record shall be responsible for the design, performance, operation or maintenance of drywells used with on-site retention.

c. Drywells must penetrate at least 10 feet into a permeable stratum and a percolation test must be carried out on the drywell before acceptance. The percolation test results are to be filed with the development services project engineer.

d. Drywells shall comply with the ADEQ publication *Guidance for Design, Installation, Operation, Maintenance, and Inspection of Drywells* and the additional requirements described herein. A copy of the application for registration by ADEQ of the proposed drywell(s) shall be submitted prior to approval of grading plans.

e. Multiple drywell installations shall be located a minimum of 100 feet apart, unless waived by the city engineer, and a minimum of 20 feet away from a basin inlet.

f. All drywells draining runoff from more than one acre of pavement are to be a dual chamber type similar to the MaxWell dual chamber drywell (Torrent Resources) or approved alternate.

g. For any project involving hazardous materials, including fuels, the drywell must include the "Envibro" Drainage System (Torrent Resources) or approved alternate.

h. Drywells shall be located a minimum of 100 feet away from water wells and underground storage tanks (except stormwater underground storage tanks).

i. Top of the drywell grate shall be set two inches above the bottom elevation of the retention basin.

j. Number and type of drywells are to be called out on the engineering plans.

k. Each drywell will be percolation tested after installation and a 50% value of its disposal rate shall be used, up to but not exceeding 0.5 cfs. The percolation test results are to be submitted to the development services project engineer with the final as-built drawings of the stormwater collection and retention plan.

l. Drywells which encounter perched water shall be sealed in the perched water zone of the well.

m. All drywells shall be registered with the ADEQ and constructed by an ADEQ licensed contractor. The approved drywell registration shall be submitted to the city by the developer at the time as-builts are submitted. A tabulation showing drywell number, registration number, and percolation rate will be added to the grading plan coversheet before submitting as-builts.

n. The property owner of record shall be responsible for the design, performance, operation and maintenance of drywells used with on-site retention.

o. Drywells that cease to drain a project area in a 36-hour period shall be replaced by the maintenance authority with new ones.

p. Drywells are not to be located within public street ROW or private street roadway tracts unless authorized by the city engineer.

3. *Storm drain discharge.* Discharge to an existing storm drain with a maximum discharge of one cubic foot per second. A waiver is required.

4. *Drainage channel discharge.* Discharge to a drainage channel either natural or man-made of sufficient capacity to convey the anticipated flows from the tributary drainage area. A waiver is required.

5. *Prohibited discharge.* Water cannot be discharged into a city street, gutter or alley.

(b) *Pump station (waiver required).*

1. Permitted direction:

a. To an open channel, either natural or man-made;

b. Subsurface direction to a nearby storm sewer system with a maximum discharge of one cubic foot per second; or

c. Surface to a storm sewer system if pumped water can be discharged directly into a catch basin or other inlet.

2. Water cannot be discharged into a city street, gutter or alley.

3. Pump stations shall comply with the requirements of Chapter 9 of Volume II of the FCDMC *Drainage Design Manual,* except as noted below.

a. Pumping facilities shall be set at an elevation at or above the anticipated level of the 100-year event, considering that a total power failure may occur.

b. Pumps shall be capable of handling solids up to a maximum of three inches.

(J) *Nuisance water.* Each basin, particularly those used as a park, shall be graded such that there are one or more "sump" areas wherein runoff from the more frequent storms and nuisance runoff may be retained/detained without flooding the balance of the basin, with preference to surface percolation.

(K) *Embankments.*

(1) Detention or retention facilities should be constructed below the natural ground surface.

(2) The use of embankments to impound stormwater runoff requires prior approval by the development services project engineer. Embankments become small dams that can be a serious potential downstream flood hazard.

(3) If approval is obtained, all the design requirements shall comply with Section 8.2.3, Embankment Design Criteria, of Chapter 8 of Volume II of the FCDMC *Drainage Design Manual.*

(4) The developer must provide the city with as-built certification by a State of Arizona registered geotechnical or civil engineer experienced in dam technology, that the embankment was designed and constructed properly, is stable and will safely impound the design volumes of water.

(L) *Underground retention storage requirements.*

(1) Underground retention shall only be considered in commercial and industrial zoned areas.

(2) Each request for underground storage will be evaluated on an individual basis and permitted if approved by the development services project engineer.

(3) The following guidelines are not meant to be exclusive and, based on the type of underground storage approved, may require additional data and details be submitted to the city engineer.

(a) Installation of corrugated metal pipe ("CMP") shall be in accordance with MAG Standard Specification No. 621, MAG Standard Detail 510 and a note on strutting spacing, if required, demonstrating that they are within manufacturer's specification and recommendation for installation. Excavation, bedding and backfill shall be in accordance with MAG Standard Specification No. 601 and material per MAG Standard Specification No. 760;

(b) Provide the depth of groundwater and the depth of the proposed installation. Provide soil boring results to at least 10 feet below the bottom of the proposed drywell;

(c) Demonstration of a 50-year life of the installation (lining and coating must be specified). Aluminized CMP is usually good for more than 50 years depending on the soil chemistry;

(d) Traffic/load bearing capacity of the installation. Pipe gauge and corrugation size of CMP and D-load for RCP must be specified;

(e) The storage pipe must drain into a dual chamber drywell. Include a detail of how the installation will be drained into the drywell. The standard drywell detail does not address anything other than normal installation. The sedimentation chamber and drain must be lower than the tank drain so the tank drains completely. The system must drain within 36 hours;

(f) Provide a backfill detail. Include material and compaction requirements, particularly under the haunches and to the springline of the pipe;

(g) Provide a minimum 30-inch diameter manhole shaft at each end of underground pipes up to 150 feet in length. Underground pipes longer than 150 feet require an additional minimum 30-inch manhole shaft every 150 feet or fraction thereof. All manhole shafts shall be equally spaced no more than 150 feet measured from center to center.

1. A 30-inch manhole frame and cover can be used at grade with a concrete collar where subject to wheel loads. Provide assurance that the pipe will structurally accommodate the manholes where there is traffic loading on the manhole.

2. The manhole shaft is to be 30 inches in unobstructed diameter. No projections or obstructions are permitted into the manhole shaft. If the manhole shaft is to be provided with a ladder, the distance from any part of the ladder measured on the side of the ladder to the opposite wall of the manhole shaft shall not be less than 30 inches. This may result in the necessity of a larger diameter manhole to accommodate a ladder. A detail of how the ladders are to be anchored must be specified and the material to be used for the ladders in order to assure a 50-year life.

(h) Provide assurance that the material used for the piping is suitable for the site's soil (letter from the Soils Engineer);

(i) Specify water-tight manufactured joints;

(j) Provide end walls for pipe per manufacturer's recommendation with a detail or MAG Standard Detail 427;

(k) Cover to be three feet minimum in traffic areas (or manufacturer's recommendation); and

(l) RGRCP is suggested for strength and durability. Structural strength calculations based on subgrade capacity are required in areas subject to wheel loads.

(4) The above requirements are to be shown or specified on the plan or otherwise satisfactorily addressed. The requested assurances are to be provided for the city's project file.

(M) *Operation and maintenance.*

(1) Maintenance of on-site detention or detention facilities within the city shall be the responsibility of the property owner.

(2) All retention basins that will be maintained by the city shall be improved by the developer per city standards for retention basin development and installed prior to the city's acceptance of the retention. Retention basins, when not privately maintained, shall be dedicated to the city in fee title as stormwater retention basins or drainage ROW. In the case where private retention basins receive water, other than that which falls upon the property and adjacent streets and/or alleys, the areas shall be designated as easement areas for retention purposes and shall have a recorded restrictive covenant requiring perpetual maintenance.

(N) *Retention basins within SRP transmission line ROW.*

(1) Retention basins are to be designed to the latest SRP's requirements.

(2) Developer shall submit drawings to the city and SRP for approval. SRP will consider both existing and planned future power facilities in their review. SRP approval letter shall be forwarded to the city engineer before final city approvals.

§ 10-4-11 DRAINAGE EASEMENTS AND COVENANTS.

For a drainage easement, the following apply:

(A) A drainage easement is an area designed and used for conveyance and/or retention of stormwater runoff in which nothing can be placed which will impede, divert or cause the runoff to have an adverse affect on adjoining property.

(B) The city engineer requires that all drainage easements and covenants be recorded on a subdivision plat or for those projects that do not require a land subdivision map or plat, the easements and covenants will be recorded by a separate instrument or document.

(C) Public easements and covenants shall be prepared and recorded by the city engineer. Private easements and covenants shall be prepared and recorded by the developer or representative after review and approval of the associated documents.

(D) It is the developer's responsibility to execute or cause the execution of the legal documents. The developer shall return the executed documents to the city engineer along with any recording fees as well as provide recorded copies of all private easements in order to receive construction document approval and/or permits.

(1) *Public drainage easements.* A public drainage easement is required if the stormwater conveyance or storage occurs per the following:

(a) The conveyance is through city property.

(b) The storage is on city property.

(c) Where stormwater is conveyed from public right-of-way onto private property.

(d) Public easements can only be extinguished through city council action.

(e) The developer's engineer shall provide the following documents with the construction documents for the preparation of a public drainage easement:

1. A sealed legal description of the easement area (Exhibit "A") (see Figure 10-7.1 in Article 10-7); and

2. A graphic exhibit of the easement area (Exhibit "B") (see Figure 10-7.2 in Article 10-7).

(2) *Private drainage easements.* Where the stormwater runoff will be retained on private property in which any of the following is true, a private drainage easement is required.

(a) Where the stormwater is conveyed across property lines; or

(b) Where stormwater is stored in a common retention area.

(3) *Temporary drainage easements.* Where the stormwater is retained in an area subject to future development, the easement can be described as a "temporary drainage easement." These easements are treated the same as regular drainage easements in that they are required to be recorded and can only be extinguished through the submittal of revised easement documents for city review and approval and the subsequent recording.

(4) *Drainage covenants.* A drainage covenant is a restrictive promise specifying the use of the property relating to storm runoff, drainage and retention. A drainage covenant shall be recorded for private property when it conveys or retains stormwater runoff from public streets or property.

§ 10-4-12 CONSTRUCTION AND INSPECTION.

(A) A responsible professional (e.g., civil engineer of record, land surveyor and the like) must certify that the drainage and retention facilities were constructed in accordance with the approved plans or as noted on provided as-built plans and that the facilities conform to city standards.

(B) The responsible professional shall utilize the drainage and retention certification letter, Exhibit 10-4.2 following the text of this Article to certify the stormwater management facilities.

§ 10-4-13 FLOODPLAIN MANAGEMENT.

(A) The City of Apache Junction, having entered into the National Flood Insurance Program by Resolution 79-41, adopted on November 7, 1979, is required to provide adequate floodplain management and control measures, with effective enforcement, consistent with criteria set forth by the Federal Emergency Management Agency ("FEMA") and Section 1910 of the National Flood Insurance Program Regulations ("NFIPR"). This action:

(1) allows residents of the community to acquire federally subsidized flood insurance;

(2) provides for local floodplain management;

(3) allows for a unified national program for managing flood losses; and

(4) provides for safer living conditions.

(B) The following excerpts are taken from the Federal Register:

(1) Flood insurance shall not be sold or renewed unless the community has adopted and uniformly enforces adequate minimum floodplain management regulations;

(2) Requires all building sites be reasonably safe from flooding and constructed to prevent flotation, collapse or lateral movement, with materials resistant to flood damage and by methods to minimize flood damage. Specific requirements are provided for manufactured homes;

(3) Requires public utilities and facilities (includes septic systems) be constructed to minimize flood damage and prevent infiltration of floodwaters and system contamination;

(4) Requires certification that alteration or relocation of a watercourse does not adversely affect upstream and downstream properties;

(5) Requires assurances that the flood carrying capacity within altered or relocated portions of watercourses be maintained;

(6) Requires evacuation plan and alternate vehicular access and escape routes be provided in Arizona;

(7) Requires a State of Arizona registered civil engineer or architect certify that floodproofing methods are adequate to withstand the flood depths, pressures, velocities, impact, up-lift forces and other factors associated with the base flood elevation;

(8) Requires that a grading and drainage plan be prepared by a State of Arizona registered civil engineer;

(9) Requires compliance by new construction or expansion by existing developments or when repair, reconstruction or improvement equals or exceeds 50% of the value of the existing development;

(10) Requires all encroachments, including fill and new construction be prohibited so as to not increase the base flood elevation;

(11) Prohibits the placement of new manufactured homes within regulatory floodways;

(12) Variances:

(a) Granting a variance is generally limited to lot sizes of less than 1/2 acre.

(b) Variances shall not be issued within a designated floodway if any increase in flood levels would result.

(c) Variances shall only be issued with a showing of good and sufficient cause and exceptional hardship, providing the variance will not result in increased flood heights, threats to public safety and expense, nuisances or conflicts.

(d) Variances will result in increased premium rates for flood insurance.

(13) Failure to adopt or enforce floodplain management regulations will result in suspension of the community flood insurance program; and

(14) FEMA elevation certificate prepared by a State of Arizona registered civil engineer or land surveyor is required.

(C) In order to comply with federal requirements, developers and engineers shall provide the following information:

(1) Confirm what flood zone the development is located within.

(2) Confirm or determine the base flood (Q100) elevation.

(3) Confirm the lowest floor (including basement) is elevated or floodproofed to one foot above the base flood level (additional one foot freeboard flood elevation is recommended).

(4) Confirm watercourses enter and leave areas to be developed in their natural locations, and that flows or highwater elevations are not increased to the detriment of upstream and downstream properties.

(5) Ensure that hydrologic data is presented in accordance with the standards found in this article.

(6) Refer to and comply with provisions of A.J.C.C., Vol. II, Article 10, Floodplain Management.

§ 10-4-14 OTHER PERMITS AND REQUIREMENTS.

(A) *Flood Control District of Maricopa County ("FCDMC").*

(1) *Drainage Design Manual.* The developer and associated design professionals are expected to be aware of and comply, except as modified by the city, with the regulations contained in the FCDMC publication *Drainage Design Manual for Maricopa County,* Volumes I, II and III, which provide guidelines for the design and construction of public and private stormwater systems.

(2) *Floodplain use permit.*

(a) FCDMC has stormwater facilities within Apache Junction and will issue a floodplain use permit when required and as appropriate. See http://www.fcd.maricopa.gov/ (see Permits link) or call 602-506-1501.

(b) The following may be required when all or part of a proposed project lies near or within a 100-year flood zone as designated by the FEMA:

1. Contact FCDMC prior to plan review submittals to the city, to determine whether a floodplain use permit is required.

2. If required, submit development plans to the FCDMC for plan review and approval. Obtain floodplain use permit prior to city plan review approval. Note that changes to grades, structures, lower floor level and the like will require re-approval by the FCDMC.

3. The grading plans, drainage report map and final plat shall show the location of the floodplain according to the FIRM.

4. The grading plans shall show pad and finished floor elevations complying with the floodplain use permit.

5. Construction and inspections for work above the lowest floor level is not permitted prior to obtaining floor level certification from the FCDMC.

(B) *Pinal County Air Quality Control District ("PCAQCD"); earth moving and dust control.*

(1) PCAQCD regulates development projects that involve earth-moving operations or dust-generation operations that will disturb 0.10 contiguous acres or greater. For additional information please see the website: http://www.pinalcountyaz.gov/AirQuality/pages/home.aspx.

(2) As described in Apache Junction City Code, Vol. I, the developer shall provide Apache Junction's development services department with copies of his, her or its PCAQD permit.

(C) *Arizona Department of Environmental Quality ("ADEQ").*

(1) *Water quality.* ADEQ regulates the quality of stormwater discharges, including those directed to drywells. The developer is responsible for designing and installing; and the landowner is responsible for operating and maintaining the storm drain system to meet applicable regulations.

(2) *Drywells.*

(a) Prior to drilling, installing or abandoning a drywell, permission must be obtained from ADEQ. The city requires notification of the ADEQ registration numbers for storm drain drywells proposed to be installed as part of a land development project. For additional information regarding this aspect of ADEQ, please see the link: http://www.adeq.state.az.us/environ/water/permits/.

(b) Prior to the issuance of any city permit, it is the responsibility of the registrant of record or drywell owner to obtain the required ADEQ drywell registration and to keep this registration on file as part of the project file and to provide copies as necessary in conformance with ADEQ regulations and/or requirements.

(3) *Notice of Intent (NOI).*

(a) As prescribed by the Arizona Pollutant Discharge Elimination System ("AZPDES") general permit for discharge from construction activities to the waters of the U.S., any development project in Apache Junction which will disturb one contiguous acres or greater, shall complete a Notice of Intent ("NOI") form. For additional information see the link: http://www.adeq.state.az.us/environ/water/permits/ or call 602-771-4632.

(b) A copy of the completed NOI shall be provided to Apache Junction's development services department prior to or in conjunction with the issuance of any construction and/or ROW permits.

(4) *Storm Water Pollution Prevention Plan ("SWPPP").*

(a) When a construction project disturbs more than one contiguous acre or greater of land in Apache Junction, a SWPPP will be prepared.

(b) A copy of the NOI and the SWPPP shall be maintained on the site and available for review. Any elements of the grading and drainage plan pertinent to or referenced on the SWPPP shall be considered a part of the SWPPP.

(c) The operator shall perform, at a minimum, a visual inspection of the construction site once every month and within 24 hours of rainfall greater than or equal to half of inch or more. The operator shall prepare a report documenting his/her findings on the conditions of the SWPPP controls and note any erosion problem areas. The operator's report is to be submitted to the city's engineering inspector for review. Facilities shall be maintained as necessary to ensure their continued functioning. In addition, all temporary siltation controls shall be maintained in a satisfactory condition until such time that clearing and/or construction is completed, permanent drainage facilities are operational and the potential for erosion has passed.

(d) The operator shall amend this plan as necessary during the course of construction to resolve any problem areas which become evident during the construction and/or during rainfalls. All

changes to the SWPPP must conform to the *Drainage Design Manual for Maricopa County, Arizona*, Volume III, *Erosion Control.*

(e) The permittee shall file a Notice of Termination ("NOT") after completion of construction and placement of final landscape materials. A copy of the NOT is to be submitted to the engineering division to final the SWPPP permit.

(f) The permittee shall save all records, including the NOI, SWPPP, NOT, and inspection reports, on file for a minimum of three years from the date of filing the NOT.

(g) The implementation of these plans and the construction, maintenance, replacement, and upgrading of these facilities is the responsibility of the permittee/contractor until all construction is approved and the NOT is submitted to the engineering division.

(h) The facilities shown on this plan must be constructed in conjunction with all clearing and grading activities in such a manner as to ensure that sediment-laden water does not enter the drainage system or violate applicable water standards. The facilities must be installed and in operation prior to any grading or land clearing. Wherever possible, maintain natural vegetation for silt control.

(i) A copy of the contractor's NOI and five copies of the reviewed and signed SWPPP must be received by the city engineer prior to any grading and drainage permit being issued.

(j) All SWPPP documents shall follow the *Drainage Design Manual for Maricopa County, Arizona*, Volume III, *Erosion Control.*

(D) *Army Corps of Engineers ("Corps").*

(1) *Section 404 permitting.* The developer and associated design professionals are expected to be aware of and comply with the permitting regulations contained in Section 404 of the Clean Water Act. See http://www.spl.usace.army.mil (see Regulatory link) or call the Phoenix project office of the Corps at 602-230-6900.

(2) *404 Areas identified.*

(a) Areas of proposed projects that are designated by the Corps as within the jurisdiction of Section 404 shall be clearly identified and delineated on the improvement plans and land subdivision maps or plats.

(b) The drainage report shall also identify and delineate Section 404 Areas on all exhibits, figures and the like as well as provide a narrative discussion regarding the 404 designation, permit holder identification and procedures to modify those designations.

(3) *Authority to modify.* The city does not have the authority to authorize any modifications, encroachments or deletions to 404 designated areas. It is the 404 permit holder's responsibility to monitor and manage the 404 Areas in accordance with the permit granted by the Corps.

EXHIBIT 10-4.1, DRAINAGE AND RETENTION AGREEMENT (SAMPLE)

For tax purposes: EXEMPT PER
A.R.S. § 11-112.4.A.3

When recorded mail to:
City of Apache Junction
Engineering Division
Department of Public Works
575 E. Baseline Ave.
Apache Junction, AZ 85119

DRAINAGE AND RETENTION AGREEMENT

An agreement for the diversion and disposal of stormwater runoff subject to certain terms and conditions contained herein is hereby provided over, under and across the real property described as:

Or as noted in Exhibit A

Retention basins within the land covered by this "Drainage and Retention Agreement" shall not at any time hereafter be filled, altered or deviate from the elevations and required volume shown on the approved improvement plans and drainage report on file at the office of the city engineer unless written authorization is granted by the city engineer. The property owner(s) shall not at any time hereafter block, obstruct or impede in any manner the flow of water across or through the property and into the retention basin(s). The owner(s) shall have an obligation to maintain the retention facilities and/or structure(s) as approved by the City of Apache Junction in accordance with development plans of the original project. Owner(s) shall not erect any building or structure on the drainage and retention paths or in any way result in a reduction of percolation that would cause the basin to retain runoff more than 36 hours after a storm. In addition, the owner(s) shall maintain the retention basin and provide an acceptable means for assuring that all basins drain within the 36-hour time period. In the event damage to any property results from violating these covenants, said owner(s) agree to restore at their own expense all such damage. This covenant agreement shall be conveyed and continued with the transfer of title or ownership of said property to any and all successors in interest, future owners or assigns.

City Engineer	Owner/Developer Signature
	Name Printed/Title
	Company Name
	Address

For city engineer
STATE OF ARIZONA)
)
County of Pinal)

This instrument was subscribed and sworn before me this ___ day of _____, 20__
By _____

_____
Notary Public My Commission Expires

For Owner/Developer
STATE OF

County of

This instrument was subscribed and sworn before me this ___day of _____, 20___
By _____

_____
Notary Public My Commission Expires

EXHIBIT 10-4.2, DRAINAGE AND RETENTION CERTIFICATION LETTER (SAMPLE)

I hereby certify that the drainage structures and the Retention Basin(s) for *[Project Name]*, located at _____ in the City of Apache Junction have been built according to the approved plans and the project has been As-Built under my supervision. The Retention Basin(s) calculations are as follows:

Retention Basin (1)

Volume required per design: XXXX (CF)
Volume provided per As-Built: XXXX (CF)

Retention Basin (2)

Volume required per design: XXXX (CF)
Volume provided per As-Built: XXXX (CF)

Retention Basin (3)

Volume required per design: XXXX (CF)
Volume provided per As-Built: XXXX (CF)

Surveyor seal and signature

ARTICLE 10-5: WATER

Section

10-5-1 General information
10-5-2 Water demands
10-5-3 Design criteria
10-5-4 Plan preparation standards
10-5-5 Electronic submittal requirements
Figure 10-5.1, Water Service Area

§ 10-5-1 GENERAL INFORMATION.

(A) These standards set forth a uniform engineering approach for determining water demand and minimum criteria for design of water distribution mains. The standards are structured to accommodate designers who are preparing construction plans for private development. It is not intended to provide standards that are all encompassing, to be substituted for innovative design. The user of sound engineering principles is encouraged to develop public water system designs that are not only economical to construct but are economical to operate and maintain.

(B) The City of Apache Junction has two water entities supplying the city with water: Arizona Water Company ("AWC")and Apache Junction Water Community Facilities District ("WUFCD") or also referred to as Apache Junction Water District ("AJWD"). Figure 10-5.1 following the text of this Article shows the limits of service for each of the water companies. Where they abut, a determination will be made of who will provide the service.

(C) New public water distribution facilities shall be designed in accordance with AWC standards within their service area or in the case of the WUFCD, standards set forth in this chapter, associated detail drawings, and where these standards are silent, Maricopa Association of Governments ("MAG") *Standard Specifications* and *Standard Details,* Arizona Department of Environmental Quality ("ADEQ") Bulletin No. 10, and American Water Works Association ("AWWA") Standards.

§ 10-5-2 WATER DEMANDS.

Developer will provide with plan submittals estimated demands for maximum day flows based on the following:

(A) Water main design shall be based on maximum day flows, as listed in Table 10-5.1 below, plus fire flows.

(B) Appurtenances (booster, reservoirs and the like) shall be designed for peak hour of the maximum day demand with provisions for fire flow and emergency flows as required.

(C) The peak hour is 1.7 times the maximum day demand.

(D) System pressures should be maintained between 60 and 100 psi for maximum day velocity.

(E) The system should not exceed 5 fps or a head loss of 10 feet per 1,000 feet, whichever is limiting.

Table 10-5.1
Maximum Day Flows

Proposed Development	*Maximum Gallons Per Capita Per Day (gpcpd)*
Low Density Residential Less than 5 dwelling units per acre	440 gpcpd
Medium Density Residential 5 to 7 dwelling units per acre	440 gpcpd
High Density Residential Greater than 17 dwelling units per acre	440 gpcpd
Commercial, Industrial Mix	240 gpcpd
Commercial/Industrial Mix	240 gpcpd
Commercial High Rise	
No landscaping or desert landscaping	180 gpcpd
With landscaping	240 gpcpd
Industrial (does not include process water)	130 gpcpd
Hotel/Motel	200 gal. per room
Schools	
Without lunch and/or shower facilities	75 gal. per student
With lunch and/or shower facilities	125 gal. per student
Malls/Retail Areas	1.5 gal. per sq. foot

(F) If a proposed development does not fit one of the above areas and the maximum is not identified in Table 10-5.1 - Maximum Day Flows, then the maximum day flow will be calculated at 220 gallons per person per day.

(G) The population density for less than five dwelling units per acre is 3.2 persons per unit and two persons per unit for population densities of five or more dwelling units per acre.

§ 10-5-3 DESIGN CRITERIA.

(A) *Pipe sizing.*

(1) (a) Public water main installation of pipe smaller than six inches is not standard and will only be allowed when directed by the city engineer in very unusual circumstances.

(b) The minimum standards for water distribution pipe sizing is as follows:

Street Classification	*Size*
Local Street	8 inch
Collector	12 inch
Parkway and Arterials or Section Line Streets	16 inch or as directed by the city engineer

(2) Mains designed as single feed systems with more than one fire hydrant shall be minimum of eight inches diameter. An eight-inch diameter main configured as a looped system with two feeds can serve up to six fire hydrants.

(3) A six-inch diameter single feed system water main is permitted only in cul-de-sacs of 350 feet or less with a maximum of one hydrant.

(B) *Pipe material.*

(1) All pipe for water lines up to and including 16-inch diameter, shall be minimum Class 50 ductile iron pipe (DIP) which meets all applicable standards and specifications. Material for pipes larger than 16 inches shall be approved by the AWC or WUFCD prior to construction.

(2) All fittings shall be ductile iron or AWC or WUFCD approved equal.

(3) Pipe shall meet all applicable AWWA C-400 standards and specifications, including the Underwriters Laboratories ("UL"), Inc.

(4) Lot testing, per AWWA C-400, may be required at the discretion of the WUCFD district engineer or an AWC representative. Testing shall be performed at an independent testing lab, approved by the AWC or WUFCD (cost of testing to be paid by supplier or contractor). Certifications and test results, for each lot to be used, shall be delivered to the AWC or WUFCD inspector prior to delivery of pipe to the job site.

(5) When necessary, restrained joints shall be in accordance with MAG Standard Details 302-1 and 302-2. EBBA Iron "Megalugs" are the acceptable standard for restraints.

(C) *Pipe locations.*

(1) As a minimum, water mains shall be installed along the frontage of the property being developed, when it is adjacent to public ROW or public utility and facilities easements. The main will be extended from the ending point of the existing water main across the entire frontage of the property needing the water, at the property owner's expense. As expressed elsewhere in this article, water mains may require looping (feeds from two sources) to create adequate flows.

(2) A six-foot minimum horizontal separation from any parallel underground utility is required. In all major streets and other active utility corridors, a utility conflict review will be required by the city engineer.

(D) *Backflow preventions.*

(1) AWC or WUFCD is responsible for protecting the quality of the public water supply. To prevent contamination of the public water supply by backflow and cross-connections, the AWC or WUFCD shall identify premises requiring backflow prevention and approved types of assemblies to prevent backflow.

(2) All required backflow prevention assemblies shall be owned and maintained by the property owner.

(3) All backflow prevention assemblies shall be tested upon installation and annually thereafter by a certified tester and results of that test forwarded to AWC or WUFCD.

(4) All services two inches and larger shall require backflow protection. All master metered residential, all commercial and all industrial services shall require backflow prevention. In some cases smaller services not in one of the preceding categories may require backflow protection as determined by the AWC or WUFCD. All unmetered fire systems shall be equipped with backflow prevention assemblies supplied with a metered detector loop.

(5) All above-ground backflow prevention assemblies three inches and larger shall be painted a neutral (earth tone) color to blend in with its surroundings.

(6) All above-ground backflow prevention assemblies smaller than three inches shall be placed in protective cages painted a neutral (earth tone) color to blend in with its surroundings.

(7) Backflow prevention assemblies shall be located outside of public right-of-way on private property.

(E) *Water services.*

(1) All water services two inches in diameter and smaller shall be Type K copper tubing. Large copper tubing shall be handled so that kinks do not develop, thus causing a water restriction.

(2) All brass service fittings shall be Ford or Mueller unless otherwise approved by the city engineer. Corporation stops, curb stops and angle stops shall include a ball style valve.

(3) All service line fittings on services two inches and smaller shall be compression style (Ford Quick Joint, Mueller 110 or approved equal), with the exception of corporation stop to saddle and angle stop to meter, which shall be threaded. No soldered joints will be allowed below ground.

(4) Corporation stops at the main shall be secured with brass or epoxy coated double strap saddles. No direct tapping of main lines for corporation stops will be allowed. Corporation stops shall be male iron pipe thread ("MIPT") inlet and compression style outlet.

(5) Services using corporation stops at the main shall be tapped at approximately the 10:00 o'clock or 2:00 o'clock position on the main. Services tapped at 12:00 o'clock (straight up) shall be used

for air release valves. Regular service taps at the 12:00 o'clock position shall be used when other tap locations are not an option and only with approval from the city engineer.

(6) Water services larger than two inches on a pressurized water main shall be installed per MAG Standard Detail 340. Live (wet) taps of water mains shall be coordinated with the AWC or WUFCD inspector. Tapping tees (sleeves) shall pass a pressure test at a minimum 200 psi for 60 minutes before the actual tap is made.

(7) Pressure reducing valves are required to be installed on the customer side of the water meter, where the static pressure exceeds 99 psi. Maintenance of the pressure-reducing valve shall be the customer's responsibility.

(8) The developer is responsible for the installation of all necessary water services for the development.

(9) Meter boxes for services two inches and smaller shall be multi-layer plastic with a vertical load rating of 25,000 pounds minimum (Mid States Plastics, Inc. BCF Series or approved equal). Boxes shall have vertical sides for ease of adjusting. Boxes shall have a rigid flange molded in the top of the box to hold its shape and provide support in concrete or asphalt or soft or sandy soil. Cover shall be ductile iron with hinged meter reading lid.

(10) Meter boxes for services two inches and smaller in traffic areas shall be concrete. Under certain circumstances the above stated plastic boxes may be used with specific approval of the AWC or WUFCD. Covers in traffic areas shall be welded steel.

(11) The developer shall size water services to properly serve the proposed project being constructed. Service sizes shall be plainly indicated on the plans submitted. Proposed water service sizes shall be reviewed and approved by the AWC or WUFCD.

(12) Single water services shall not serve properties under separate ownership without the written approval of the city engineer.

(13) The developer's contractor shall install the water meter vault and provide the meter for all services over two inches. Vaults shall have full opening aluminum covers with spring assist. Vaults shall be installed per MAG Standard Detail 321 and include the service inlet and outlet piping. Water meters and other equipment shall be installed using clearances and other details found in MAG Standard Details 345-1 and 345-2. Detailed drawings or manufacturer's literature with lid and door dimensions shall be presented to the city engineer for approval before installation.

(14) Services will be turned on by AWC or WUCFD personnel only. It is unlawful for anyone other than an employee for the AWC or WUFCD or someone under his or her direct supervision to operate valves that will activate water services. Water services will only be turned on after a responsible individual has completed all appropriate paper work to open an account and all applicable fees have been paid.

(F) *Water meters.*

(1) The AWC or WUFCD provides and installs all meters for services two inches and smaller at the owner's or developer's expense. Meters for services larger than two inches shall be supplied by the owner/developer. Meters two inches and smaller shall be Precision brand, model PMM, or District-approved equal, with electronic ECR register and "Touch Read" meter reading system. Under certain

circumstances, two-inch services may require compound meters. Meters for domestic use larger than two inches shall be Sensus compound or Metron single jet meters as directed by the AWC or WUFCD, with electronic ECR register and "Touch Read" meter reading system or AWC or WUFCD-approved equal. Any domestic service two inches or larger shall require backflow protection behind the meter. All master metered residential services shall require backflow prevention.

(2) Meters used for a system that is a combination of domestic use and fire protection shall be Sensus Compact FireLine assemblies or approved equal with ball valves and test ports. All iron parts on meter shall be epoxy coated inside and out. Combination service shall require backflow protection behind the meter.

(3) Large meters, on potable lines not combined with fire systems, three inches and larger shall be installed with a minimum two-inch bypass with valves to allow a continued water source should the meter need to be repaired or replaced.

(4) The architect, engineer or applicant shall include the projected water flow rate requirements for the proposed water services on the project on the plans. Care should be taken in sizing meters and services to sufficiently supply the needs. The AWC or WUCFD will review the information provided on plans and specifications and make the final determination of meter size requirements.

(5) Temporary fire hydrant meters are required in obtaining construction water and can be ordered from the AWC or WUFCD.

(G) *Fire hydrants.*

(1) Fire hydrants in the public rights-of-way or public properties shall be installed per MAG Standard Details 360 and 362.

(2) The normal location of fire hydrants is the northeast corner of street intersections. Mid-block fire hydrants shall be placed on the same side of the street as the water main line whenever practical.

(3) All fire hydrants installed in the system shall be connected to the water main with a minimum six-inch water line connection and have a minimum six-inch main valve.

(4) Maximum spacing for fire hydrants in general is 500 feet. Superstition Fire and Medical District ("SFMD") has final approval for hydrant spacing and flow requirements.

(5) All fire hydrants shall be set to blue top hub per MAG Standard Specification 756.3. There shall be a minimum of 18 inches of clearance from the lowest nozzle to finish grade.

(6) A minimum clear distance of three feet from the centerline of the fire hydrant is required.

(7) Fire hydrant outlets shall have National Standard Threads. Fire hydrants approved for installation on AWC or WUFCD water mains are:

(a) Kennedy - Guardian;

(b) Mueller - Super Centurian;

(c) Waterous - Pacer; and

(d) Clow - Medallion.

(H) *Valve standards, spacing and location.*

(1) Twelve-inch and smaller:

(a) Maximum of 600-foot spacing in industrial/commercial districts;

(b) Maximum of 800-foot spacing in residential areas;

(c) Maximum of 30 single-family units or five valves per shutdown;

(d) One valve on each side of major crossing, such as canals, railroads, freeways and the like; and

(e) One gate valve between main and each fire hydrant.

(2) Sixteen-inch and larger: maximum of 1,000-foot spacing.

(3) Epoxy coated, resilient seated gate valves are required on water mains 12 inches in diameter or smaller. All gate valves shall conform to Section 630.3 of the MAG Uniform Standard Specifications. All valves must meet or exceed AWWA C-509 or C-515 standards.

(4) Sixteen-inch mains may have either gate or butterfly valves depending on the application. Final determination with regard to which valve shall be used shall be decided by the city engineer. Valves must conform to Sections 630.3 and 630.5 of the MAG Uniform Standard Specifications respectively. Gate valves shall also meet or exceed AWWA C-509 or C-515 standards.

(5) Butterfly valves or approved equal are required on water mains larger than 16 inches in diameter. All butterfly valves shall conform to Section 630.5(A) of the MAG Uniform Standard Specifications.

(6) Butterfly valve manual operators shall be furnished with ground level position indicators. Position indicators shall attach to the extension stem and shall indicate the relative positions, which direction to turn the operator to open and close the valve, and how many turns to close the valve from the fully open position.

(7) Certified shop drawings shall be submitted to the city engineer for review and approval prior to shipment of the butterfly valves.

(8) Tapping sleeves and valves are to conform to Section 630.4 of the MAG Uniform Standard Specifications and be installed per MAG Standard Detail 340. All wet taps shall be performed by a contractor approved by AWC or WUCFD.

(9) All valve boxes and covers shall be installed per MAG Standard Detail 391-1, Type "A." All valve boxes used by the AWC or WUCFD shall be manufactured for that specific purpose. No PVC pipe or other "field designed" boxes will be allowed

(10) Pressure reducing and pressure sustaining valve stations shall be of a two-stage design; i.e., a valve for normal and high flows, and a valve for low flows. Valves shall be installed in a vault of an approved design behind the sidewalk. Valves and vault shall be reviewed and approved by the city engineer prior to ordering.

(11) Approved air vacuum release devices shall be installed on all water mains 12 inches or larger in diameter at locations where the slope changes from positive to negative, and vice versa. Air release devices may also be required on mains smaller than 12 inches as determined by the city engineer.

(12) Water line valves shall meet or exceed the pressure classification of the water line. Valve pressure rating should be noted on the plans.

(I) *Easement width.*

(1) Six-inch and eight-inch water: 20-foot minimum;

(2) Twelve-inch water main: 20-foot minimum; and

(3) Over 12-inch: Width based on design conditions.

(4) Additional easement width may be required by the city engineer if, in his or her opinion, excessive laying depth of the pipe would require the additional width for maintenance purposes.

(J) *Installation depth.* Water mains shall be installed to minimum depth measured from finished grade to top of pipe as follows:

Size	***Minimum Depth***
8-inch and smaller	36 inches
12-inch and 16-inch	48 inches
16-inch and smaller in major streets	48 inches
20-inch and larger	Special design

(K) *Water construction requirements.*

(1) All water main design shall take into consideration the Water Construction Notes, set forth in A.J.C.C., Vol. II, § 10-2-15.

(2) The engineer and the contractor shall verify the stationing, elevations and type of pipe to be matched at all field closure points.

(3) The contractor shall contact "Blue Stake" five working days prior to construction.

(4) The contractor shall pothole all existing utilities ahead of his or her construction to allow for any necessary adjustments to the grade line.

(5) No other utilities shall be installed in the same trench as the water main.

(6) Vertical realignment by means of pipe deflection shall not exceed 1/2 the pipe manufacturer's recommendation. Deflection angle information shall be given on the plans. Vertical realignment by means of bends and offsets shall be per MAG Standard Detail 370 for water mains six inches to 12 inches in diameter. Water mains larger than 12 inches shall have vertical realignment detailed by the engineer.

(7) One joint of pipe (ten feet minimum) shall be installed on all stubs after valve installation.

(8) All fittings and hydrants requiring thrust blocking (kickers) shall be wrapped in a minimum of two layers of six mil plastic sheeting, and care shall be taken to keep concrete separate from bolts, barrel drains, followers and the like.

(9) All new water mains shall be disinfected and flushed following AWWA Standard C 651-99.

(10) It is policy to require the use of a fire hydrant meter by the contractor to obtain construction water. New water line shall be filled through the hydrant meter unless an alternate method is approved by the city engineer. The contractor shall obtain a fire hydrant meter from the AWC or WUFCD and pay all fees and water bills. If the use of a fire hydrant meter is not possible, the AWC or WUFCD inspector will tabulate the number of times the water line is filled and estimate the amount of water used and the contractor will be charged accordingly.

(L) *Reclaimed Water.* All reclaimed water lines shall be designed and installed per M.A.G. Standard Details listed under M.A.G. Specifications Section 616.

§ 10-5-4 PLAN PREPARATION STANDARDS.

(A) Plans shall be on 24-inch by 36-inch sheets.

(B) Symbols shall be per MAG Standards supplemented by AWC or WUCFD details.

(C) Orientation of each plan sheet shall be shown by a north arrow.

(D) A general notes sheet(s) shall contain the Water Construction Notes listed in Article 10-2, Construction Plan Requirements, A.J.C.C., Vol. II, § 10-2-15.

(E) Plans shall be prepared on vellum, linen or Mylar. Sepias are not permitted.

(F) A cover sheet is required on plans of more than two sheets when water plans are not part of the general set.

(G) Each sheet shall be identified by sheet number and project name.

(H) All sheets shall have the State of Arizona engineer's signed registration seal prior to submittal to the city for approval.

(I) Cover sheet, when part of separate water plans, shall contain:

(1) Project title;

(2) Developer (address, telephone number and contact name);

(3) Engineering firm (address, telephone number and contact name);

(4) Appropriate signature approval blocks and utility review block;

(5) Properly oriented vicinity map;
(6) Properly oriented key map;

(7) Water main construction notes (see A.J.C.C., Vol. II, § 10-2-15 of this Chapter);

(8) Materials list, and estimated quantities;

(9) Appropriate processing numbers: D.C.O. (subdivision, re-zoning, site plan and the like) quarter section and associated plans tracking numbers;

(10) Legend;

(11) Index of plan sheets; and

(12) Benchmarks used.

(J) The key map is a small map of the project site that provides a system overview and is used to index the plan sheets. The key map shall show the following:

(1) all streets, alleys, easements, tracts and parcels shall be identified;

(2) water mains, fire hydrants, valves and production facilities (tanks, booster and the like); and

(3) index of plan sheets indicated by single line with arrows showing beginning and end of each sheet.

(K) The plan sheets shall show the following to proper scale:

(1) All streets, alleys and easements.

(a) streets shall be identified by name.

(b) streets, alleys and easements shall be dimensioned at least once and at all breaks.

(c) monument line of streets shall be shown.

(2) All abutting lots shall be identified by lot number, tract and subdivision.

(3) Location of all existing utilities, structures, paving and other topographic features affected by construction.

(4) All connections to existing water lines with fittings clearly labelled and method of connection specified.

(5) If applicable, proposed sewer main must be shown. Sewer main shall be shown in a "lighter weight" line to identify it as being informational only and not a part of this plan.

(L) Scale shall be per Article 10-2, Construction Plan Requirements, A.J.C.C., Vol. II, § 10-2-5(D).

(M) Original plan sheets shall be sufficiently clear to allow legible prints to be half-sized. The size of lettering and symbols shall be 1/8-inch minimum. Shading is not permitted.

(N) Each plan sheet shall show:

(1) project title;

(2) sheet number;

(3) north arrow to orient each line;

(4) existing utilities with size and location in ROW;

(5) new construction with valves, fire hydrants, tees, bends, crosses, taps, tapping sleeve and valves and other appurtenances shown;

(6) match lines to show continuation of lines from sheet to sheet; and

(7) ROW limits shall be shown in plan view.

(O) Valves shall be located at point of curvature of the curb return at intersection and property lines in mid-block.

(P) Location of fire hydrants and valves shall be referenced from the street monument line.

(Q) All fittings shall be identified.

(R) Fire hydrants shall be located in accordance with MAG Standard Detail 362.

(S) Valve boxes shall be Type "C" per MAG Standard Detail 391. Valves shall be resilient seat up to 16-inch.

(T) Meter service connections shall be shown to each lot or parcel. Service may be stationed from street intersection monuments or from individual lot property lines, except on curved streets and in cul-de-sacs, where the connection must be stationed both on the main and from applicable property lines.

(U) Meter service connection locations in other than a residential subdivision must be out of traveled roadway/sidewalk. They may be located in planter area, parking lot island and the like, and should be

sufficiently above finish grade to minimize flooding. Meter locations shall be easily accessible from a street or traveled way.

(V) Summary of quantities sheet shall be submitted with the plans. Items shall be listed as follows:

Item	*Unit*
Blow off	Each
Fire hydrants	Each
Lateral valve	Each
Main line valves	Each
Meter box	Each
Pipe encasement/sleeving	Linear foot
Tapping sleeve and valve	Each
Water main	Linear foot
Water service line	Linear foot
Each item shall be broken down by size and material.	

(W) A large development may require the modeling of the development for water volume, pressure and fire flows. The requirement shall be determined by the city engineer. If required, the modeling shall use the WUCFD's Waterman model titled "AJ Water Model."

§ 10-5-5 ELECTRONIC SUBMITTAL REQUIREMENTS

All approved water line construction plan sheets shall be submitted to the development services project engineer in electronic format per § 10-1-5(C).

FIGURE 10-5.1, WATER SERVICE AREA

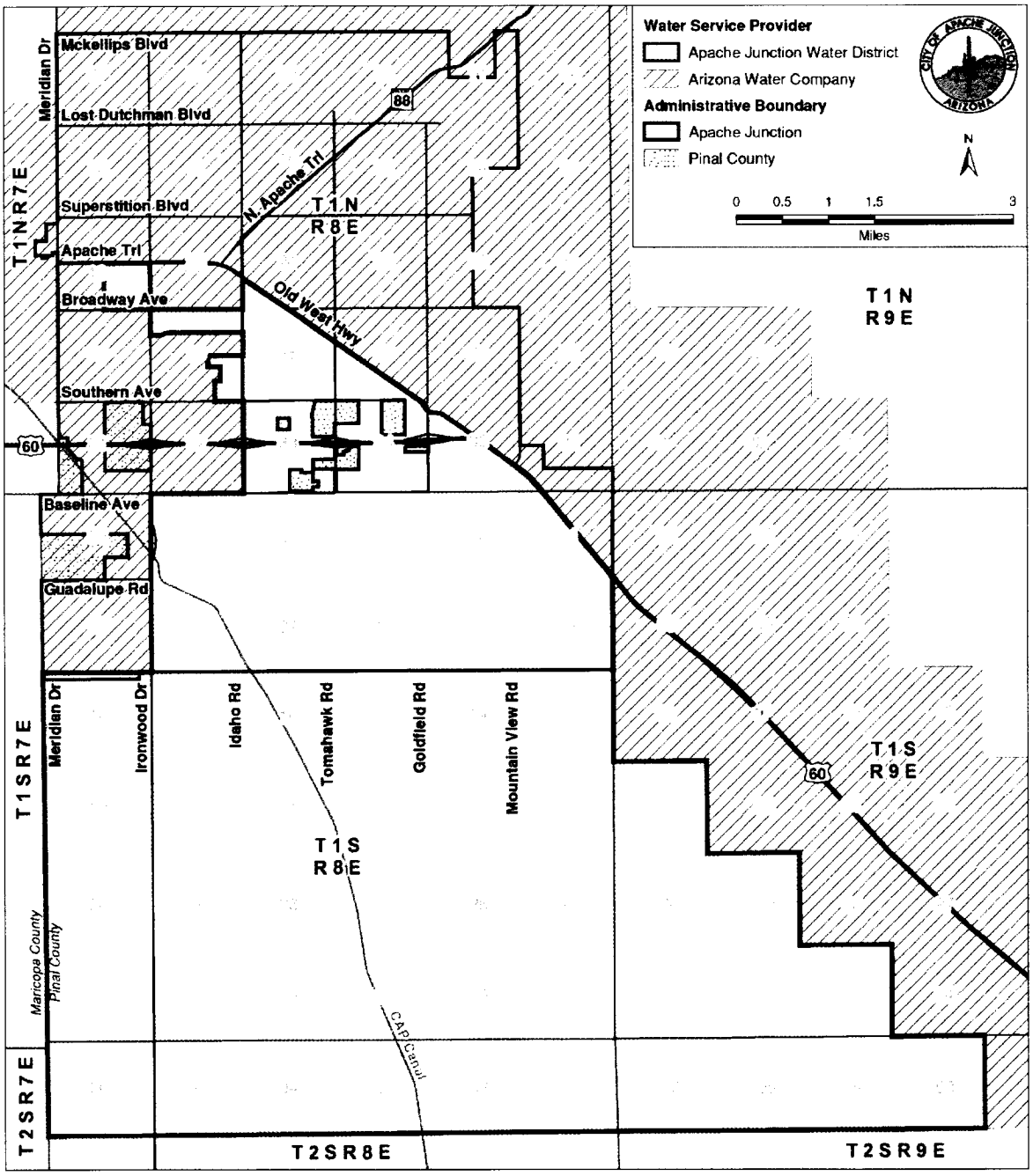

ARTICLE 10-6: SEWER

Section

10-6-1 General comments
10-6-2 Sewer line extension policy
10-6-3 Design and construction standards
10-6-4 Construction within public right-of-way
10-6-5 Electronic submittal requirements

§ 10-6-1 GENERAL COMMENTS.

This Article describes the engineering design standards and guidelines for providing the required sewage collection within the City of Apache Junction and within the approved 208 Plan Sewer District boundary.

§ 10-6-2 SEWER LINE EXTENSION POLICY.

See A.J.C.C., Vol. II, § 10-1-4(D) of this Chapter for the sewer line extension policy.

§ 10-6-3 DESIGN AND CONSTRUCTION STANDARDS.

All design and construction shall be in accordance with and approved by the Superstition Mountains Community Facilities District No. 1 ("SMCFD"). The most current SMCFD *Standard Specifications of Construction* shall be used for guidance but are not binding on the city engineer's authority.

§ 10-6-4 CONSTRUCTION WITHIN PUBLIC RIGHT-OF-WAY.

(A) *Trenching and pavement replacement.* For sewer line extensions and sewer taps in existing pavement areas within public ROW, the pavement replacement shall be per Apache Junction Standard Detail AJ-200M, Type "S."

(B) *Manholes.* All manholes constructed in the pavement areas within public ROW shall have the tops of the frames and covers at surface grade and a concrete collar constructed per M.A.G. Standard Detail 422.

§ 10-6-5 ELECTRONIC SUBMITTAL REQUIREMENTS

All approved sanitary sewer construction plan sheets shall be submitted to the development services project engineer in electronic format per § 10-1-5(C).

ARTICLE 10-7: SITE DEVELOPMENT

Section

10-7-1 Site plan; preliminary
10-7-2 Site development
10-7-3 Public right-of-way and easement dedication
10-7-4 Public improvement assurance alternatives
10-7-5 Electronic submittal requirements
Figure 10-7.1, Exhibit "A" legal description (Sample)
Figure 10-7.2, Exhibit "B" exhibit (Sample)
Exhibit 10-7.1, Performance bond (Sample)
Exhibit 10-7.2, Letter of Assurance (Sample)
Exhibit 10-7.3, Improvement Guarantee Agreement

§ 10-7-1 SITE PLAN; PRELIMINARY.

The preliminary site plan review process and requirements are set forth in the city "Preliminary Design Review Packet."

§ 10-7-2 SITE DEVELOPMENT.

(A) *General information.* All new developments shall provide for vehicle parking, refuse collection, SFMDemergency vehicle access, landscaping, waste control, on-site private water and sewer systems, and on-site stormwater retention per all applicable city codes, ordinances, utility company requirements and the following standards.

(B) *Refuse collection stations.* The city requires that all refuse shall be collected and disposed of by a private contractor.

(C) *Waste control.* See the applicable sections of these standards for any waste control requirements.

(D) *Vehicle parking and storage yard facilities.*

(1) All developments shall provide for on-site vehicular parking per the following standards: Current city Zoning Ordinance requirements for on-site street parking and loading, as set forth in A.J.C.C., Vol. II, Article 1-20, Parking, Loading, and Interior or Private Street Standards.

(2) All developments that have temporary access, parking and storage areas shall provide a minimum of a double chip seal treatment or a treatment that is approved by the city engineer. The treatment provided shall be maintained by the owner until the permanent pavement section is placed. The double chip seal treatment shall consist of (minimum):

First Application	0.6 gallons of CRS-2P per square yard
	30 pounds of 3/8-inch low volume treated chips per square yard

Second Application	0.4 gallons of CRS-2P per square yard
	20 pounds of 3/8-inch low volume treated chips per square yard

(E) *SFMD access.*

(1) *General information.* All developments shall provide access for SFMD vehicles and personnel per the following standards. It is the developer's responsibility to contact the SFMD to determine the specific requirements for the development.

(2) *Access width, turning radius and minimum surface treatment.*

(a) A 20-foot (minimum) wide access is required for SFMD access.

(b) 1. Turning radii per SFMD details are required at all entrances and interior driveway intersections where access is required.

2. Ladder truck access is required for all development except the following:

a. Mini-storage facilities when the office is located adjacent to public streets.

b. Storage yards when non-combustible materials are the only items stored.

(c) 1. For areas that have temporary access to structures, a double chip seal treatment or a treatment that is approved by the city shall be provided and maintained for the access until the permanent pavement section is placed.

2. The double chip seal treatment shall consist of (minimum):

First Application	0.6 gallons of CRS-2P per square yard
	30 pounds of 3/8-inch low volume treated chips per square yard
Second Application	0.4 gallons of CRS-2P per square yard
	20 pounds of 3/8-inch low volume treated chips per square yard

(3) *Building access.*

(a) Buildings shall be located so that SFMD apparatus may be parked within 150 feet of the farthest point on the ground floor of the building. This 150-foot dimension is measured along the route a person would follow from the truck to a given point on the building.

(b) A fire sprinkler system shall be installed per Fire Code requirements. Specifications for the sprinkler system vary with the type of development. It is the developer's responsibility to contact the SFMD to determine the specific requirements for the development.

(c) SFMD connections shall be per the SFMD requirements.

(d) Retention areas shall not be considered as part of the required access.

(e) Provide a minimum of 14 feet, 6 inches vertical clearance.

(f) There shall be a minimum 10-foot setback from fire lanes.

(g) Any roadway intended for SFMD access shall not have a grade greater than 8%.

(h) Fire lane signs shall be posted on SFMD access perpendicular to the flow of traffic. Signs shall be visible from both directions and mounted between five feet and seven feet above final grade. Signs shall be installed a maximum of 75 feet apart and at any horizontal change in direction.

(i) The SFMD does not allow speed bumps more than four inches high or any obstructions that may impede an emergency vehicle response on a SFMD access roadway.

(j) Multi-unit occupancies shall post premises identification, as approved by the SFMD, when bordering SFMD access. Numbers shall be on a contrasting background.

(4) *Security gates.* Private security gates which, in the opinion of the Fire Chief and/or the Police Chief, hamper the adequate responses to emergencies by public safety services, shall be equipped with both a Knox keypad and a pre-emptive device approved by SFMD.

(a) The equipment shall be capable of fail-safe operation in case of power loss. In the event of an emergency, a means shall be provided to leave gates unlocked.

(b) An approved list of devices may be obtained through SFMD.

(F) *Landscaping; general information.* See Apache Junction City Code, A.J.C.C., Vol. II, Chapter 6, Landscaping.

§ 10-7-3 PUBLIC RIGHT-OF-WAY AND EASEMENT DEDICATION.

(A) *General comments.* The following requirements apply to the preparation of survey documents which are to be used to dedicate land to the public or to grant an easement to the public for roadway, drainage, flood control, utility line, emergency or service vehicle access, or other public uses. Some of these requirements may be waived by the city engineer if it is demonstrated that the requirements are not appropriate because of the size or nature of a development.

(B) *Streets, rights-of-way and public easements.* All proposed streets, ROW and easements shall be identified on both the preliminary and final subdivision plats. The final subdivision plat shall contain a dedication for all ROW and public easements. The development services project engineer shall establish required dedication language.

(C) *Private utility easements.* All easements proposed for dedication to a private utility company shall be identified on both the preliminary and final subdivision plats. The final subdivision plat shall contain an offer of dedication for all such easements to the appropriate utility company. Acceptance of such offers shall be the responsibility of the utility company.

(D) *Vehicular non-access easement ("VNAE").* VNAEs shall be shown on the subdivision plat. No driveway or vehicle gate shall be installed which would permit a vehicle to access or cross a VNAE. VNAEs adjacent to public ROW are also subject to review and approval by the city engineer in addition to the development services project engineer.

(E) *Other easements.* Other easements required by the general plan, the zoning ordinance or the city engineer shall be shown on both the preliminary and final subdivision plats.

(F) *Prepare legal descriptions and exhibits.* For public ROW and easements not included in the final plat, prepare Exhibits "A" and "B" as follows:

(1) *Exhibit "A."* Prepare a legal description of each property on a separate sheet. A surveyor registered in the State of Arizona shall sign and date his or her fixed seal, and provide the public works department - engineering division with Exhibit "A" on acid-free paper. See Figure 10-7.1 following this article for a sample Exhibit "A."

(2) *Exhibit "B."* Prepare an exhibit of each property on a separate sheet.

(a) Include:

1. property's legal description from title report;

2. construction project name;

3. project number;

4. assessor's parcel numbers of all adjacent property;

5. any plat information; and

6. additional ROW required including sufficient dimensioning to provide a legal description.

(b) A surveyor registered in the State of Arizona shall sign and date his or her fixed seal, and provide the public works department – engineering division with Exhibit "B" on acid-free paper. See Figure 10-7.2 following this article for a sample Exhibit "B."

(3) Developer shall pay any recording fee(s) and ROW and/or easement acquisition costs.

(4) The city engineer will:

(a) prepare the warranty deed cover documents;

(b) have the documents signed and notarized; and

(c) have the documents recorded.

§ 10-7-4 PUBLIC IMPROVEMENT ASSURANCE ALTERNATIVES.

Assurance of construction shall be provided prior to the approval of the improvement plans.

(A) Assurance of construction options are as follows:

(1) posting a 100% performance bond issued by an Arizona qualified surety (see Exhibit 10-7.1 following this article);

(2) establishing a cash trust; said funds to be deposited in a financial institution to the credit of the city (see Exhibit 10-7.3 following this article);

(3) posting with the city a certificate of deposit for 100% of the estimated cost issued by a banking institution authorized to issue same; or

(4) filing with the city an executed letter of assurance or contract of guarantee between the city and a trust company, banking institution or other financial institution approved by the city and authorized to enter into such contracts (see Exhibit 10-7.2 following this Article).

(B) The amount of the security is to be based upon the cost estimate prepared by a registered professional civil engineer or licensed contractor in an amount to cover the complete installation of the off-site improvements and requires concurrence by the city engineer.

(C) The security shall provide for its forfeiture to the city in the event that the improvements were started but not completed or not accepted by the city.

(D) Posting a 100% warranty bond issued by an Arizona qualified surety (see Exhibit 10-7.1 following this article) if provisions for a warranty bond are not already included in a performance bond.

§ 10-7-5 ELECTRONIC SUBMITTAL REQUIREMENTS

All approved construction plan sheets and reports shall be submitted to the development services project engineer in electronic format per § 10-1-5(C).

FIGURE 10-7.1, EXHIBIT "A" LEGAL DESCRIPTION (SAMPLE)

Portion of Lot 1 of C.A. Subdivision
Project #:
Additional Right-of-Way Parcel #101-05-??
Owner of Record:

EXHIBIT "A"

LEGAL DESCRIPTION

A portion of Lot 1 of the ABC Subdivision, according to the plat of record in the office of the County Recorder of Pinal County, Arizona, more particularly defined as follows:

Beginning at the North 1/4 Corner of Sec. 19, T1N, R8E, G&SRB&M, Pinal County, Arizona; thence S 0°05'W, a distance of 60' along the midsection line of said Sec. 19,
Thence N 89°55'W, a distance of 25' to a point in the West R/W line of Delaware Drive, being also the point of tangency of a right-of-way curvature line, being also a point in the East line of Lot 1 of the Pueblo Del Sol Subdivision and being the Point of Beginning;
thence S 0°05'W along said West R/W line of Delaware Drive and said East line of Lot 1, a distance of 3.00';
thence N 89°55'W, a distance of 5.00' to an angle point in the new R/W line and new property corner of said Lot 1;
thence N 37°57'49"W, a distance of 29.21' to a point in the existing southerly R/W line of Superstition Boulevard and a point in the North property line of said Lot 1, being 62.00 east of the Northwest corner of said Lot 1;
thence easterly along said North property line a distance of 3.00' to a point of curvature of a curve to the right;
thence southeasterly along said curve of radius 20', a curve length of 32.42' to the Point of Beginning, containing approximately 235.1 square feet more or less, and further defined on Exhibit "B," attached hereto, and made a part hereof.

FIGURE 10-7.2, EXHIBIT "B" MAP (SAMPLE)

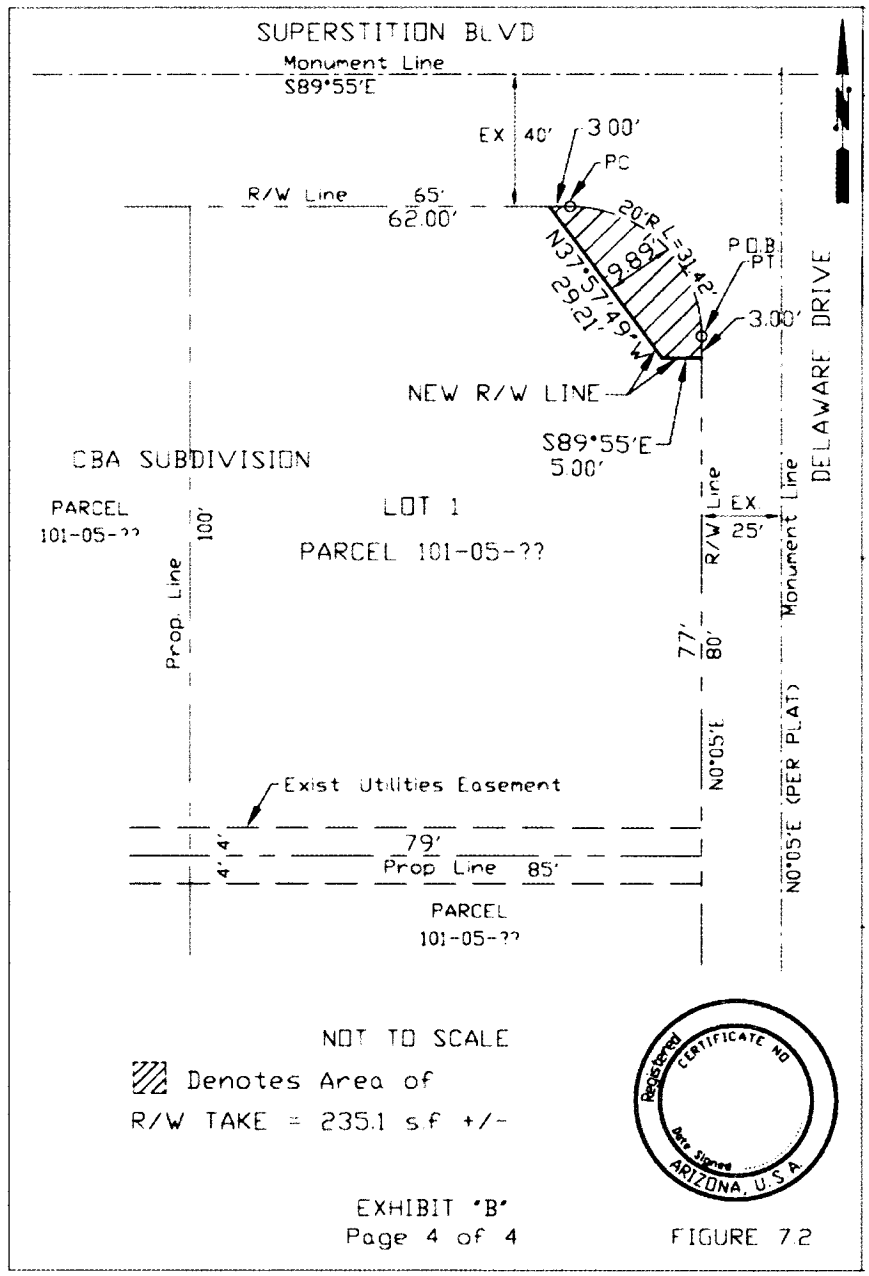

EXHIBIT 10-7.1, PERFORMANCE BOND (SAMPLE)

Bond #_____
Expiration Date:_____

PROJECT NAME:
PROJECT ADDRESS:

WHEREAS, _____("Principal") and _____ a corporation organized and existing under the laws of the State of _____ and duly authorized to transact surety business in the State of Arizona ("Surety") are held and firmly bound unto the City of Apache Junction, an Arizona municipal corporation ("Obligee") in the sum of _____ lawful money of the United States of America, for the payment of which we bind ourselves, our heirs, successors and assigns jointly, severally, and firmly.

WHEREAS, Principal is required by Obligee to post a performance bond for curb, gutter, sidewalk, streetlights, paving, concrete, utilities, and all other off-site improvements required by the approved plans on file at Obligee's Development Services and public works departments.

NOW, THEREFORE, IT IS AGREED that once construction has started, in the event the improvements in the above described project are not completed, as evidenced either by a lack of work on the improvements for a period of 60 calendar days, or improvements as constructed are not acceptable to Obligee's Engineer and not in compliance with Obligee's standards, and Principal refuses to make satisfactory corrections, then Obligee may, upon certified letter to Surety, draw upon the Performance Bond to the amount necessary to complete the improvements or make satisfactory corrections.

Should the condition of this bond be fully performed, this obligation shall become null and void; otherwise it shall be and remain in full force and effect.

Surety hereby stipulates and agrees that no change, extension of time, alteration or addition to the terms of this Agreement or the specifications accompanying the same shall in any manner affect its obligations on this bond, and it does hereby waive notice of any such change, extension, alteration or addition.

A 10% Warranty Bond of the total amount set forth in the Performance Bond or a continuance of the Performance Bond shall be required for a one 1-year Warranty Period, which starts at the final acceptance of the entire project by the city engineer. In no event shall the Obligee be obligated to use Obligee's funds for any Public Improvements.

SIGNED, SEALED AND DATED THIS ____ DAY OF _____, 20____

_____	_____
Principal	Surety
By: _____	By: _____
	Attorney-in-Fact
Bank Seal	* Surety Signature to be notarized * Provide copy of Power of Attorney for Surety "Attorney-in-Fact"

EXHIBIT 10-7.2, LETTER OF ASSURANCE
FOR CONSTRUCTION OF IMPROVEMENTS (SAMPLE)

Assurance for construction of improvements within the *(Project Name)*

For the purpose of providing the Assurance of Construction of Improvements within the corporate areas of the City of Apache Junction ("City"), _____ ("Owner") (also herein referred to as "Developer,") and _____ (Institution) herein referred to as "Financial Institution," licensed to do business in Arizona, represent as follows:

1. Financial Institution is committed to provide an irrevocable line of credit or sufficient funds to Developer, to cover the entire cost of installing improvements, consisting of, but not limited to: utilities, paving, curbs, gutters, sidewalks, storm drainage, streetlights, irrigation, including engineering and inspection costs, and the cost of replacement or repairs of any of the above improvements which become damaged in the course of construction. Said credit or funds shall be in the aggregate amount of: _____ ($_____) based upon a cost estimate submitted by Developer and approved by the city engineer. The city has the right to review the contents of the Letter of Credit to ensure no conflict of interest exists between the developer and the financial institution.

It is agreed that once construction has started, in the event the improvements in the above-described project are not completed as evidenced either by a lack of work on the improvements for a period of sixty (60) calendar days, or improvements as constructed are not acceptable to the city engineer and not in compliance with City standards, and Developer refuses to make satisfactory corrections, then the City of Apache Junction may, upon certified letter to the Financial Institution, draw upon the line of credit in the amount necessary to complete the improvements or make satisfactory corrections.

Ten percent (10%) of the total amount set forth in said cost estimate must be retained for a 1-year Warranty Period, which starts at the final acceptance of the entire project by the city engineer. In no event shall the City be obligated to use City funds for any Public Improvements.

This line of credit shall remain in force and effect until the improvements for said project have been completed and accepted by the Public Works Director or the city engineer, or their designees, as evidenced by letter.

DEVELOPER State of _____ Subscribed and sworn to before me by

_____

County of _____ this _____ day of _____,

20____.

BY: _____

_____

Notary Public My commission

expires

TITLE: _____

FINANCIAL INSTITUTION State of _____ Subscribed and sworn to before me by

_____

County of _____ this _____ day of _____,

20____.

BY: _____

_____

Notary Public My commission expires

TITLE: _____

Approved By: State of Arizona Subscribed and sworn to before me by

_____

CITY OF APACHE JUNCTION County of Pinal this _____ day of _____, 20____.

By: _____

_____

Notary Public My commission expires

TITLE: _____

Approved as to form:

_____

City Attorney

EXHIBIT 10-7.3, IMPROVEMENT GUARANTEE AGREEMENT BETWEEN THE CITY OF APACHE JUNCTION AND (_____) (SAMPLE)

This Agreement made and entered into this _____ day of _____, 20__, by and between (_____) ("Developer") and the CITY OF APACHE JUNCTION, an Arizona municipal corporation ("City") (collectively, the "Parties") for improvement guarantee for the project known as _____ _____ (the "Project") located at _____ (the "Property").

RECITALS

A. The City requires a performance guarantee sufficient to complete the public improvements as shown on the Improvement Plans of the Project.

B. Both Developer and City desire that a Certificate of Deposit ("security") be pledged to the City in the amount ("Improvement Guarantee Amount") sufficient to insure and guarantee that certain improvements, as hereinafter described, are made to the Property. The Certificate of Deposit shall be based on the Construction Cost Estimate as set forth in Exhibit A provided by Developer's Consulting Engineer and approved by the development services project engineer and made part of this Agreement.

C. The Parties desire to set in writing their Agreement regarding the holding and distribution of such funds and the guarantee of the improvements to be made as set forth below.

AGREEMENT

NOW, THEREFORE, the Parties hereto agree as follows:

1. Improvement Guarantee Amount. The Parties, and each of them, hereby direct (Financial Institution Name) ("Bank") to pledge to City for the benefit of Developer and City the Improvement Guarantee Amount, a Certificate of Deposit which shall be an amount of (_____ words _____) ($_____). It is the specific intent and desire of the Parties that such Improvement Guarantee Amount be pledged to City for the purpose of guaranteeing that Developer performs work on the public improvements to the Property, which improvements will be made in accordance with City's engineering standards and any utility companies' standards. The Improvement Guarantee Amount shall be held by Bank in an interest bearing account, which shall be an account established solely for the purposes set forth in this Agreement and shall be pledged to City by Bank specifically for such improvements. Such specific improvements to the Property are those listed on Construction Cost Estimate in Exhibit A.

2. Distribution of Funds. The Parties agree that the Improvement Guarantee Amount shall only be reduced by City in an amount or amounts equal to completed work as specified in Exhibit A when, and only when, City's public works department and any utility companies verify that such work has been completed, approved and inspected. No partial payment for any line item in Exhibit A shall be allowed. Ten percent (10%) of the total amount set forth in Exhibit A must be retained for a one (1) year Construction Warranty Period, which starts at the final acceptance of the entire project by the city engineer.

3. Authorization Documents. For Developer to be eligible for payment or reduction in the amount of

security under the terms of this Agreement, it must submit the following documents to City (herein the "Authorization Documents"):

a. A written statement signed by Developer indicating that such improvements are completed and reduction in security is requested.

b. A written statement signed by city engineer or his applicable designee verifying that the construction improvements claimed to be performed by Developer have in fact been so performed as the case may be.

c. Written statements signed by the affected utility companies verifying that the construction improvements claimed to be performed by Developer have in fact been performed and accepted, as the case may be.

4. Instruction to City. City agrees to notify Bank of the amount of reductions to the security in accordance with the provisions set forth herein and in a timely manner once the Authorization Documents noted above have been received subject to the administrative procedures established by city engineer. City may rely upon the Authorization Documents as full authorization to make the reductions requested therein, and shall incur no liability for acting in accordance with such Authorization Documents. In the event of a dispute between Developer and city engineer concerning the reduction of the Improvement Guarantee Amount, City shall not be obligated to reduce any portion of the Improvement Guarantee Amount until City receives Authorization Documents signed by both Developer and city engineer and in accordance with the established administrative procedures.

5. Certification of Receipt of Funds. City further agrees that it shall certify to Developer in writing when City has received the funds set forth in Section 1 above. The Parties agree and understand that this Agreement shall not become effective until this certification has been received by Developer.

6. City Administrative Fee. City shall charge an administrative fee based on the amount set forth in Exhibit A to administer this Agreement. The administrative fee shall be as follows:

ADMINISTRATIVE FEE
(Per Exhibit 'A' – Construction Cost Estimate)

Cost Estimate		Fee
$ 10,000 to $ 99,999	:	$ 500.00
$ 100,000 to $ 499,999	:	$ 1,000.00
$ 500,000 to $ 999,999	:	$ 2,000.00
$ 1,000,000 to $4,999,999	:	$ 4,000.00
$ 5,000,000 to $9,999,999	:	$ 8,000.00
$10,000,000 or more	:	$10,000.00

7. Forfeiture of Improvement Guarantee Amount. It is agreed that once construction has started, in the event the improvements in the above described project are not completed, as evidenced either by a lack of work on the improvements for a period of sixty (60) calendar days, or improvements as constructed are not acceptable to the city engineer and not in compliance with City standards, and the Developer refuses to

make satisfactory corrections, the City of Apache Junction may, upon certified letter to the said Bank, draw from the Certificate of Deposit the amount necessary to complete the improvements or make satisfactory corrections. In no event shall City be obligated to use City funds for any Public Improvements.

8. Indemnification. Developer agrees to indemnify, defend, and hold harmless City, its elected officials, appointees, officers, departments, divisions, employees and agents, from any and all claims, liabilities, disputes, expenses or lawsuits brought by any party as a result of any negligent acts or omissions of City, its elected officials appointees, officers, departments, divisions, employees, and agents involving the obligations under this agreement, including but not limited to attorney fees, court costs, damages, and all appellate proceedings expenses.

IN WITNESS WHEREOF, the Parties have executed this Agreement on the date and year first above written.

DEVELOPER:

(DEVELOPER NAME)

By: _____

Its: _____

FINANCIAL INSTITUTION:

(BANK NAME)

By: _____

Its: _____

CITY:
CITY OF APACHE JUNCTION, an Arizona municipal corporation

By: _____

Its: _____

APPROVED AS TO FORM:

_____
R. Joel Stern
City Attorney

STATE OF ARIZONA)
)
COUNTY OF)

On _____, 20__, before me, _____, a Notary Public in and for said State, personally appeared _____, personally known to me (or proved to me on the basis of satisfactory evidence) to be the person whose name is subscribed to the within instrument and sworn to me that he/she executed the same in his/her authorized capacity for (DEVELOPER NAME).

WITNESS my hand and official seal

_____
Notary Public

(seal)

STATE OF ARIZONA)
)
COUNTY OF)

On _____, 20___, before me, _____, a Notary Public in and for said State, personally appeared _____, personally known to me (or proved to me on the basis of satisfactory evidence) to be the person whose name is subscribed to the within instrument and sworn to me that he/she executed the same in his/her authorized capacity for (BANK NAME).

WITNESS my hand and official seal

_____
Notary Public

(seal)

ARTICLE 10-8: SUBDIVISION PLATS

Section

10-8-1 General information

§ 10-8-1 GENERAL INFORMATION.

Refer to the city's subdivision regulations set forth in A.J.C.C., Vol. II, Chapter 2, Article 2-2 for further information.

ARTICLE 10-9: AS-BUILTS

Section

10-9-1 As-built requirements
10-9-2 Submittals
10-9-3 Minimum technical requirements
10-9-4 Electronic submittal requirements

§ 10-9-1 AS-BUILT REQUIREMENTS.

City construction permits will not be released nor any type of construction accepted until certified as-built plans have been submitted to and approved by the city.

§ 10-9-2 SUBMITTALS.

(A) One set of as-built Mylar plans shall be submitted to the city for permanent record. The as-built Mylars shall be copies from the original Mylars that contain all the original signatures. The Mylar can be either Mylar or photo Mylar (minimum size 22 inches by 34 inches, maximum size 24 inches by 36 inches, 4 mil double mat and be of a quality allowing scanning into electronic format. No vellum or paper copies will be accepted.

(B) If the project is developed in phases, as-built plans for each phase shall be submitted once the work is complete in that phase. Letters of completion and acceptance will not be issued until all items out of tolerance have been corrected and all final as-builts have been submitted and approved by the city.

(C) As-built plans shall be signed and sealed by a State of Arizona registered professional engineer or registered land surveyor with the "AS-BUILT CERTIFICATION" approval block. The "AS-BUILT CERTIFICATION" approval block is only needed on the cover sheet.

(D) An electronic copy of the as-built drawings shall be submitted in either PDF or TIF format on a properly labelled CD.

§ 10-9-3 MINIMUM TECHNICAL REQUIREMENTS.

(A) *Paving as-built plans.*

(1) Station for all grade breaks;

(2) Back of curb offset dimension and centerline station at all changes in alignment;

(3) Top of curb, gutter and pavement centerline elevations at all grade breaks, curb returns, valley gutters, plus any other location necessary to adequately show drainage; and

(4) Survey monuments – installation and accuracy certification.

(B) *Storm drain as-built plans.*

(1) Street centerline station and offset dimension to all structures and changes in alignment and/or changes in grade; and

(2) Top and invert elevations for all structures.

(C) *Grading and drainage as-built plans.*

(1) Elevations at all drainage control points (e.g., retention overflow point, tops and bottoms retention basins, drywall rims, valley gutters, curbs);

(2) Dimensions of all retention areas;

(3) Retention calculations revised to as-built condition;

(4) First floor or pad elevations; and

(5) Location of all existing structures (e.g., buildings).

(D) *Water as-built plans.*

(1) *Water Utility Community Facilities District ("WUCFD").*

(a) Street centerline station and offset dimension to:

1. All fire hydrants and fittings (e.g., valves);

2. Main at all changes in alignment (horizontally and/or vertically); and

3. All horizontal control points (e.g., centerline intersects, PC, PT).

(b) Station and elevations given at all vertical alignment changes;

(c) Centerline station and offset to each service tap; size of tap and dimension to nearest side property line; and

(d) Centerline station, offset and elevations to all changes in vertical alignment (e.g., dips, bends and the like) required to avoid conflicts with other utilities shall be noted.

(2) *Arizona Water Company ("AWC").* Per AWC requirements.

(E) *Sewer as-built plans.* Per SMCFD requirements.

(F) *Street light and traffic signal as-built plans.*

(1) Station location and monument line off-set dimension to center of pole for all street lights;

(2) J-box verification and location;

(3) Location of all traffic signal poles, cabinets, J-boxes and related conduits;

(4) Loop detector verification and location;

(5) Any abandonment of existing conduits and facilities shall be noted;

(6) Verification and location of signage related to traffic signal.

§ 10-9-4 ELECTRONIC SUBMITTAL REQUIREMENTS.

All approved construction plan sheets and reports shall be submitted to the development services project engineer in electronic format per § 10-1-5(C).

APPENDIX 10-A: DOWNTOWN CORE AREA AND B-3 ZONING DISTRICT

Section

10-A-1 General comments
10-A-2 Intent
10-A-3 Location
10-A-4 Design guidelines

§ 10-A-1 GENERAL COMMENTS.

This Appendix 10-A describes the engineering design guidelines for the special designated area known as the "Downtown Core Area" and the B-3 zoning classification.

§ 10-A-2 INTENT.

The Downtown Core Area will be a mixed-use area that will include commercial and residential in a walking environment.

§ 10-A-3 LOCATION.

The Downtown Core Area is shown on Apache Junction Standard Detail AJ-12.1.

§ 10-A-4 DESIGN GUIDELINES.

The design guidelines are detailed in the City of Apache Junction's Commercial Design Guidelines and the Apache Junction Main Street Design Dictionary.

APPENDIX 10-B: RURAL AREA

Section

10-B-1 General comments
10-B-2 Intent
10-B-3 Design guidelines

§ 10-B-1 GENERAL COMMENTS.

This section describes the Engineering Design Guidelines for the special designated area known as the "Rural Area."

§ 10-B-2 INTENT.

The Rural Area is intended to have a rural character to it with no curb, gutter, sidewalk or street lights. The terrain and vegetation shall be minimally disturbed.

§ 10-B-3 DESIGN GUIDELINES.

(A) *Street section and right-of-way requirements.* See Apache Junction Standard Details AJ-20.6 through AJ-20.8 for the street section and ROW requirements for the Rural Area.

(B) *Curb and gutter.* No curb and gutter shall be constructed normally, but special circumstances may require some. The city engineer will decide when curb and gutter and the type shall be required.

(C) *Sidewalk.* No sidewalk shall be constructed in the Rural Area.

(D) *Street lights.* No street lights shall be constructed in the Rural Area.

(E) *Vertical profile of street.* The vertical profile of a street in the Rural Area should have the proposed edges of pavement near the existing ground to reduce the need for constructed slopes and to facilitate overland drainage and/or existing wash crossings in dip-sections.

(F) *Stormwater drainage.* The stormwater drainage shall normally be conveyed across the Rural Area streets in a dip-section per MAG Standard Detail 552. The dip-section shall only be used where:

(1) The calculated Q100 drainage flow will be less than 12 inches maximum depth at the dip-section.

(2) The calculated Q100 drainage flow velocity at the dip-section shall not be detrimental to a vehicle crossing the dip-section.

(3) A dip-section needs to act as a spillway area for a larger drainage flow that will not be able to be conveyed totally under the street section (e.g., FEMA designated areas) when the depth or velocity is too great for a normal dip-section.

(G) The city engineer shall reserve the right to require modifications to the above standards along major arterial streets within the Rural Area.

APPENDIX 10-C: LOST DUTCHMAN HEIGHTS

Section

10-C-1 General comments
10-C-2 Intent
10-C-3 Location
10-C-4 Design guidelines

§ 10-C-1 GENERAL COMMENTS.

This section describes the Engineering Standards for the special designated area known as "Lost Dutchman Heights."

§ 10-C-2 INTENT.

Lost Dutchman Heights is the area south of Baseline Avenue. This area will become the southern portion of Apache Junction and has great potential for large parks, waterways, trail systems, residential, commercial, light industrial and business park users, and a good lifestyle.

§ 10-C-3 LOCATION.

Lost Dutchman Heights is shown on Apache Junction Standard Detail AJ-12.1.

§ 10-C-4 DESIGN GUIDELINES.

(A) *Street section and right-of-way requirements.*

(1) The principal arterial and parkway roadways are shown in the Lost Dutchman Heights Concept Plan prepared for Arizona State Land Department, a copy of which is on file in the development services department. The streets are detailed in Apache Junction Standard Details AJ-20.4 and AJ-20.5 and include 10-foot meandering sidewalks and raised landscaped medians.

(2) The remaining street sections are detailed in Apache Junction Standard Details AJ-20.1 through AJ-20.4.

(B) *Utility locations.*

(1) No utilities shall be constructed under the pavement areas in the principal and parkway section streets except to cross intersections.

(2) The utility locations shall be:

(a) The sewer and water locations shall be on opposite sides of the roadway between the back of curb and sidewalk (see Standard Details AJ-20.9 and AJ-20.10).

(b) The other utilities (gas, telephone, cable TV and the like) shall be located between the sidewalk and right-of-way line (see Standard Details AJ-20.9 and AJ-20.10).

(C) *Street lights.* The street lights for the principal arterial and parkway street sections shall be double-masted and mounted in the median.

(D) *Stormwater management.*

(1) There are a number of large washes that traverse the Lost Dutchman Heights area including two FEMA "floodplain" designated washes (Weekes Wash and Siphon Draw). All streets crossing these washes will need to have a method of conveying the 100-year storm runoff under the streets, and provide for overtopping of larger storm events to be contained within the crossing.

(2) On-site area stormwater management will need to meet the requirements of A.J.C.C., Vol. II, Engineering Standards, Article 10-4 of this Chapter.

(3) A number of washes in the Lost Dutchman Heights area have been designated "Waters of the U.S." and may require an Army Corps of Engineers "404 Permit" to develop within or adjacent to these designated washes.

APPENDIX 10-D: STANDARD DETAILS

Apache Junction Standard Details

AJ-12.1	Special Area Map
AJ-13.1	Open Trench/Open Pit/Utility Pole Fencing/Barricade Detail
AJ-15.1	Shallow Pit Percolation Test Requirements
AJ-20.1	Local Street Cross Sections
AJ-20.2	Collector Street Cross Section
AJ-20.3	Arterial Street Cross Sections
AJ-20.4	Principal Arterial Street Cross Sections – Lost Dutchman Heights
AJ-20.5	Parkway Cross Section – Lost Dutchman Heights
AJ-20.6	Local Street Cross Sections - Rural Area
AJ-20.7	Collector Street Cross Section - Rural Area
AJ-20.8	Arterial Street Cross Sections - Rural Area
AJ-20.9	Principal Arterial Utility Locations – Lost Dutchman Heights
AJ-20.10	Parkway Utility Locations – Lost Dutchman Heights
AJ-20.11	"Main Street" Cross Section
AJ-20.12	"Main Street" Plan View
AJ-21.4	Partial Principal Arterial or Parkway Street Cross Section
AJ-28.1	Street Sign
AJ-28.2	Street Sign Installation
AJ-200M	Backfill, Pavement and Surface Replacement

Apache Junction Water Company Standard Details

AJW-101	3/4-inch to two-inch Water Meter Setting Detail
AJW-102	Combination Air-Release Valve Assembly 2 Inches and Smaller
AJW-103	Typical Main Dead-End Blowoff Assembly
AJW-106	Valve Box and Operator Extension Assembly
AJW-120	Bore Casing Detail

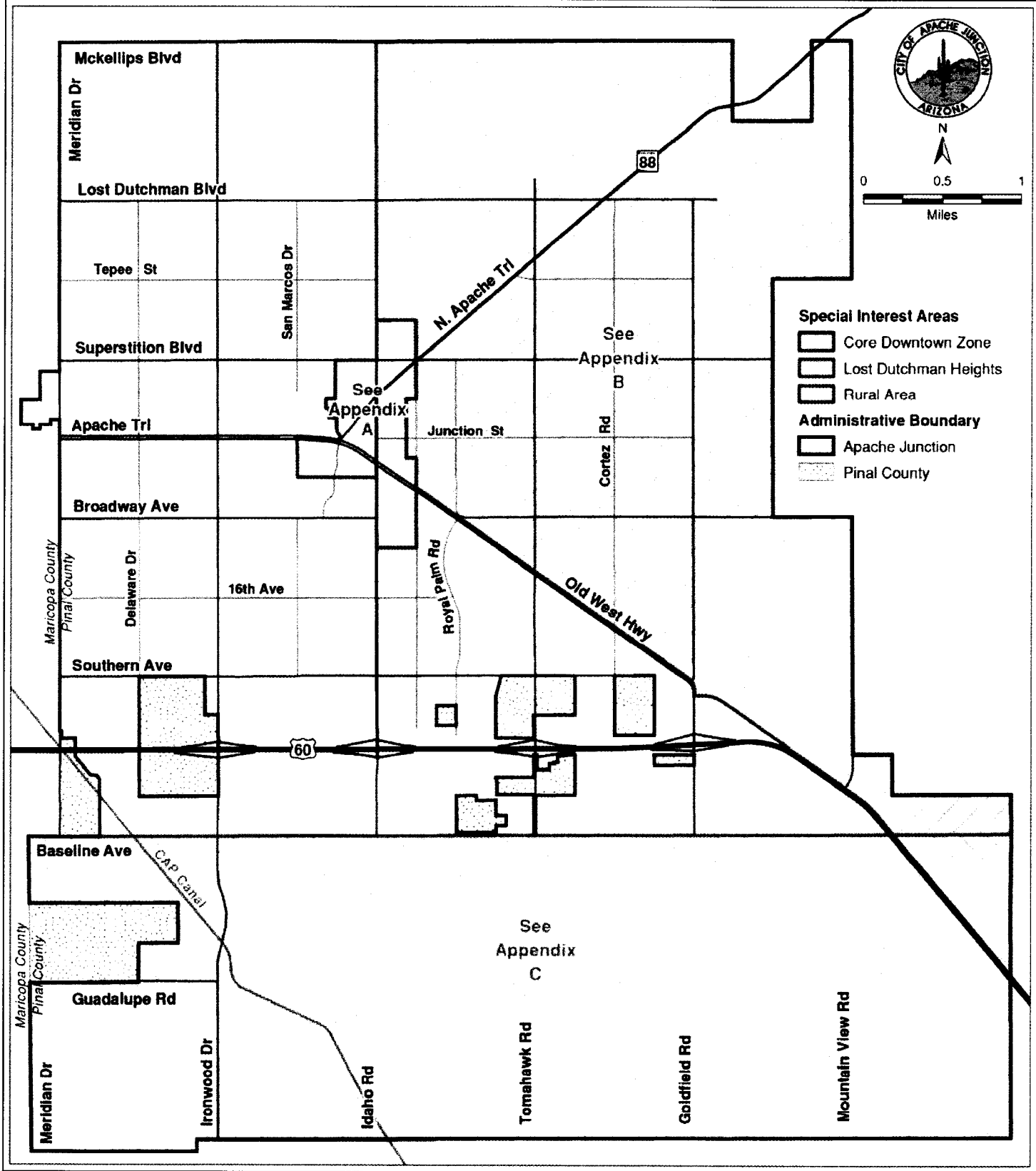

DETAIL NO.	SPECIAL AREA MAP	CITY OF APACHE JUNCTION STANDARD DETAIL
AJ–12.1		REV 12/2015

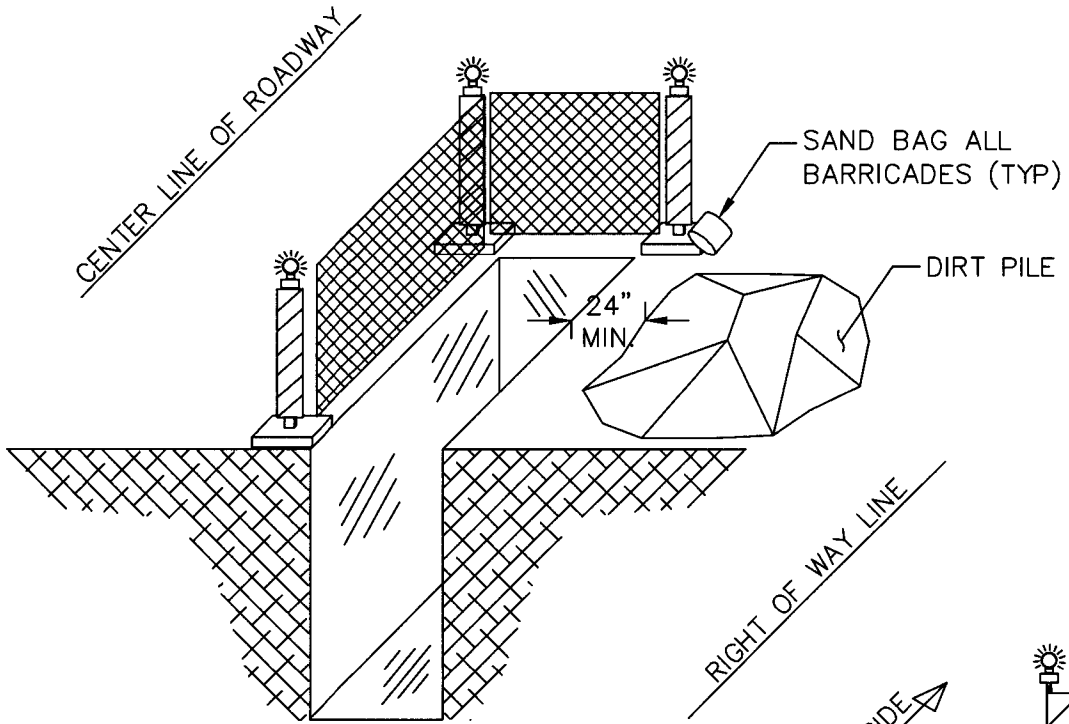

SECTION VIEW
OPEN TRENCH / PIT

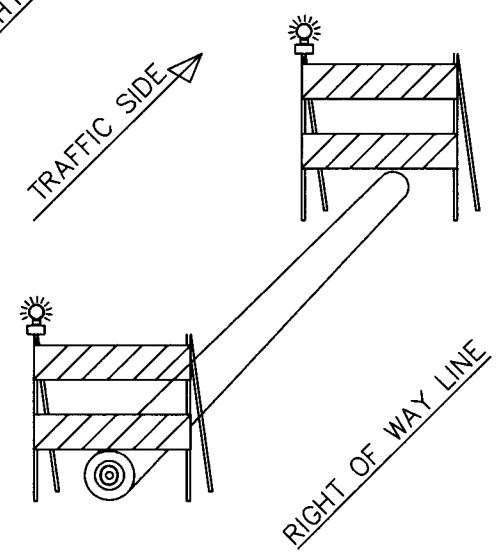

UTILITY POLE VIEW UTILITY POLE
ALONG ROADWAY

NOTES□

1. A SAFETY FENCE IS RE□UIRED FOR ALL UNATTENDED TRENCHES 2□ INCHES AND WIDER□AND/OR □□ INCHES AND DEEPER.

2. FOR UNATTENDED TRENCHES LEFT OVERNI□HT□USE LI□HTED VERTICAL PANEL □ARRICADES WITH SAND □A□S AND/OR TYPE I□II □ARRICADES. ANY ALTERNATIVE SOLUTION MUST □E APPROVED □Y THE CITY EN□INEER.

□. ALL UTILITY POLE LOCATIONS NOT PLATED MUST HAVE SAFTEY FENCE PLACED AROUND HOLE PRIOR TO CREWS LEAVIN□ THE SITE.

□. ALL UTILITY POLES LEFT ALON□ THE ROADWAY□MUST HAVE LI□HTED □ARRICADES PLACED AT EACH END OF THE POLE.

DETAIL NO.	OPEN TRENCH / OPEN PIT / UTILITY POLE FENCIN□ / □ARRICADE DEATIL	CITY OF APACHE JUNCTION STANDARD DETAIL	DETAIL NO.
AJ–13.1			AJ–13.1

REV 12/201□

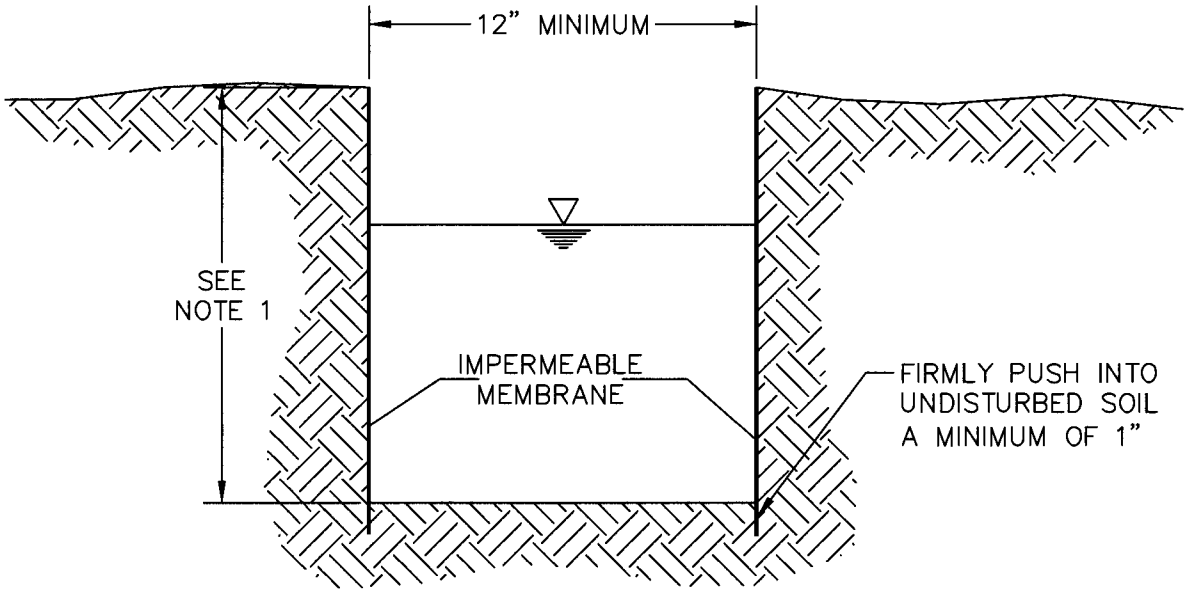

NOTES□

1. THE TEST SHALL □E PERFORMED THREE FEET □ELOW NATURAL □ROUND OR AT THE ELEVATION OF THE □OTTOM OF THE RETENTION □ASIN□WHICHEVER IS LOWER.

2. THE TEST HOLE SHALL □E PRE□WETTED FOR 2□ HOURS□OR UNTIL A STA□ILI□ED PERCOLATION RATE IS ACHIEVED.

□. THE TEST HOLE SHALL □E REFILLED DURIN□ THE PRE□WETTIN□ PERIOD AS NECESSARY TO MAINTAIN A FREE WATER SURFACE. IF AT ANYTIME A FREE WATER SURFACE IS NOT MAINTAINED□THE PRE□WETTIN□ PROCESS SHALL □E RESTARTED.

□. THE TEST RESULTS ARE TO □E E□PRESSED IN THE UNITS OF CU□IC FEET PER HOUR PER S□UARE FOOT OF PERCOLATION AREA.

DETAIL NO.	SHALLOW PIT PERCOLATION TEST RE□UIREMENTS	CITY OF APACHE JUNCTION STANDARD DETAIL	DETAIL NO.
AJ–15.1			AJ–15.1

REV 12/201□

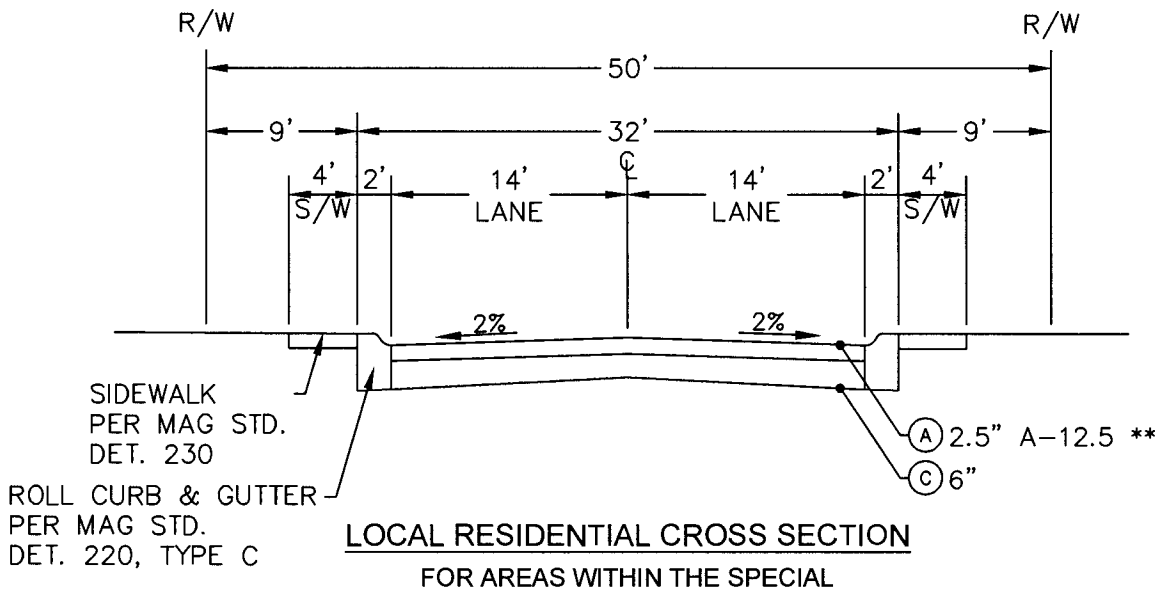

LOCAL RESIDENTIAL CROSS SECTION

FOR AREAS WITHIN THE SPECIAL RURAL AREA□SEE APPENDI□ □

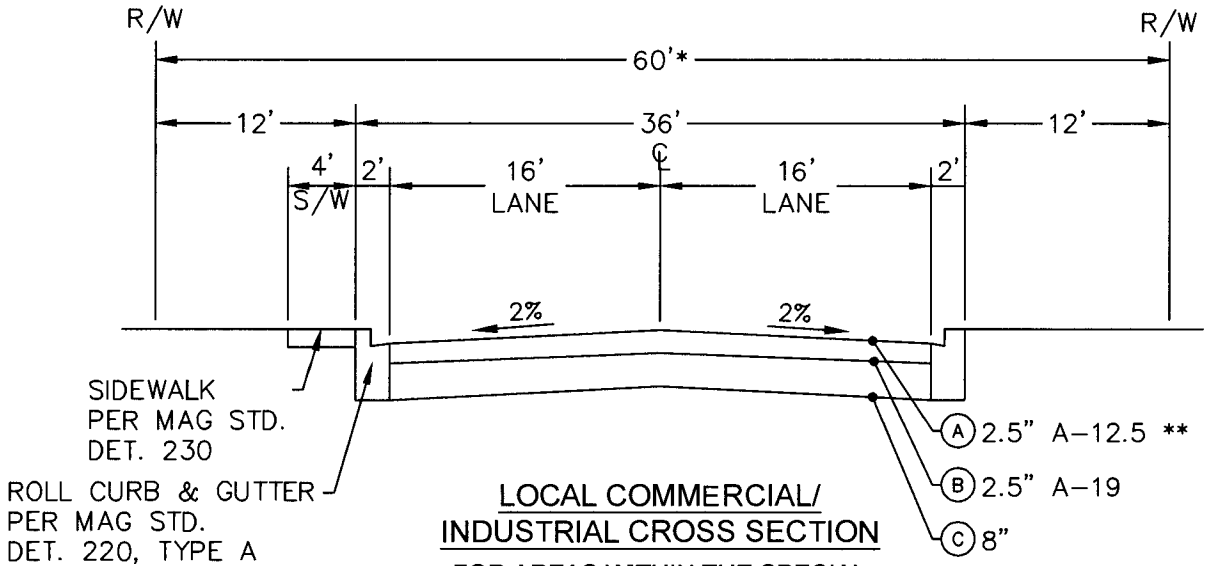

LOCAL COMMERCIAL/
INDUSTRIAL CROSS SECTION

FOR AREAS WITHIN THE SPECIAL RURAL AREA□SEE APPENDI□ □

NOTES□

Ⓐ ASPHALT CONCRETE SURFACE COURSE □□□

Ⓑ ASPHALT CONCRETE □ASE COURSE □□□

Ⓒ A□□RE□ATE □ASE COURSE PER MA□ SPEC □02.2

□ AU□ILLARY TURN LANES MAY □E RE□UIRED AT INTERSECTIONS WITH ADDITIONAL RI□HT□OF□WAY RE□UIREMENTS.

□□ SURFACE TREATMENT SHALL □E □RADE SS□1H FO□ SEAL IN ACCORDANCE WITH MA□ SECTION □□□ APPLIED AT A RATE OF 0.1 □AL/S□.YD. OR AS OTHERWISE DIRECTED □Y THE CITY EN□INEER.

□□□ ASPHALT CONCRETE SHALL CONFORM TO THE EAST VALLEY ASPHALT CRITERIA□1□□□ EDITION AND □E APPROVED □Y THE EVA COMMITTEE.

DETAIL NO.	CROSS SECTIONS LOCAL STREET	CITY OF APACHE JUNCTION STANDARD DETAIL	DETAIL NO.
AJ-20.1			AJ-20.1

REV 12/201□

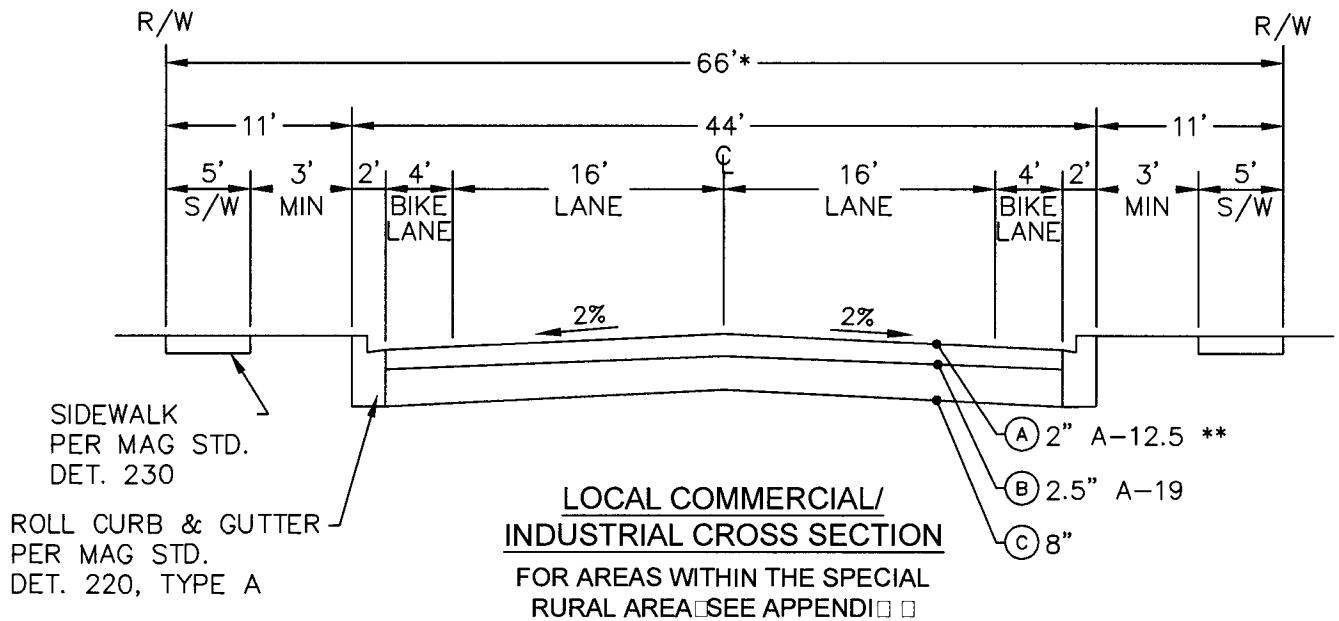

LOCAL COMMERCIAL/
INDUSTRIAL CROSS SECTION

FOR AREAS WITHIN THE SPECIAL
RURAL AREA SEE APPENDI

SEE NOTES ON AJ 20.1

DETAIL NO.	CROSS SECTIONS COLLECTOR STREETS	CITY OF APACHE JUNCTION STANDARD DETAIL	DETAIL NO.
AJ-20.2			AJ-20.2

REV 12/201

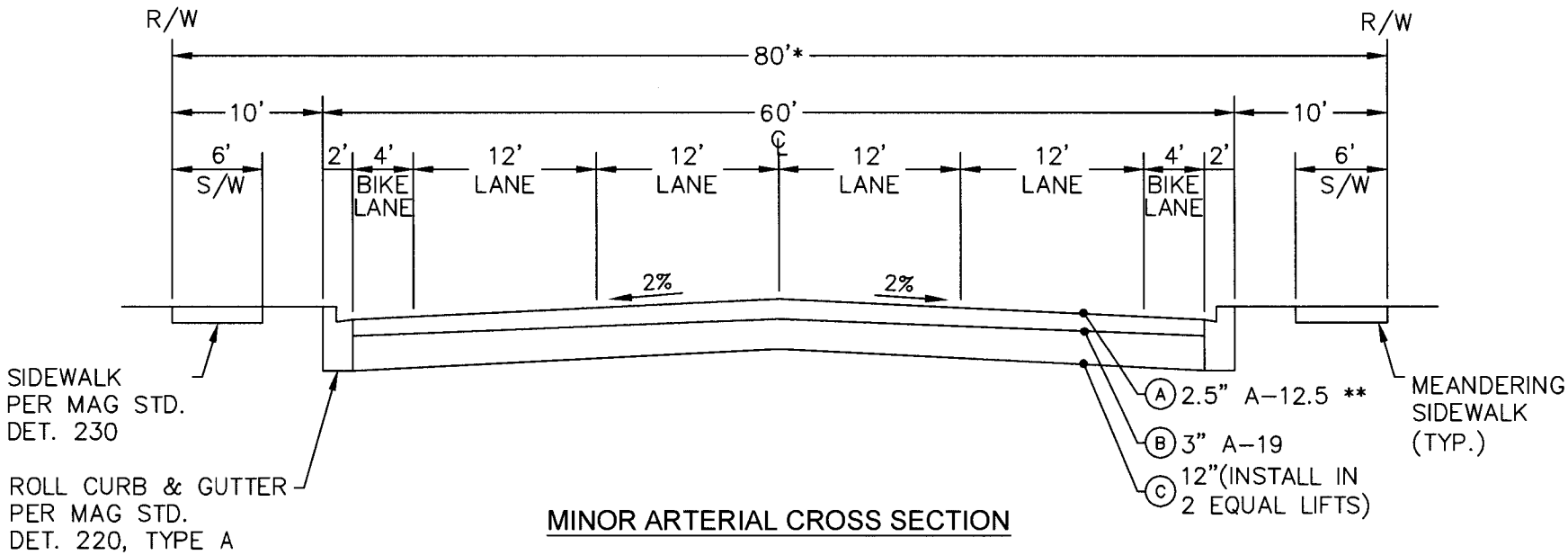

MINOR ARTERIAL CROSS SECTION

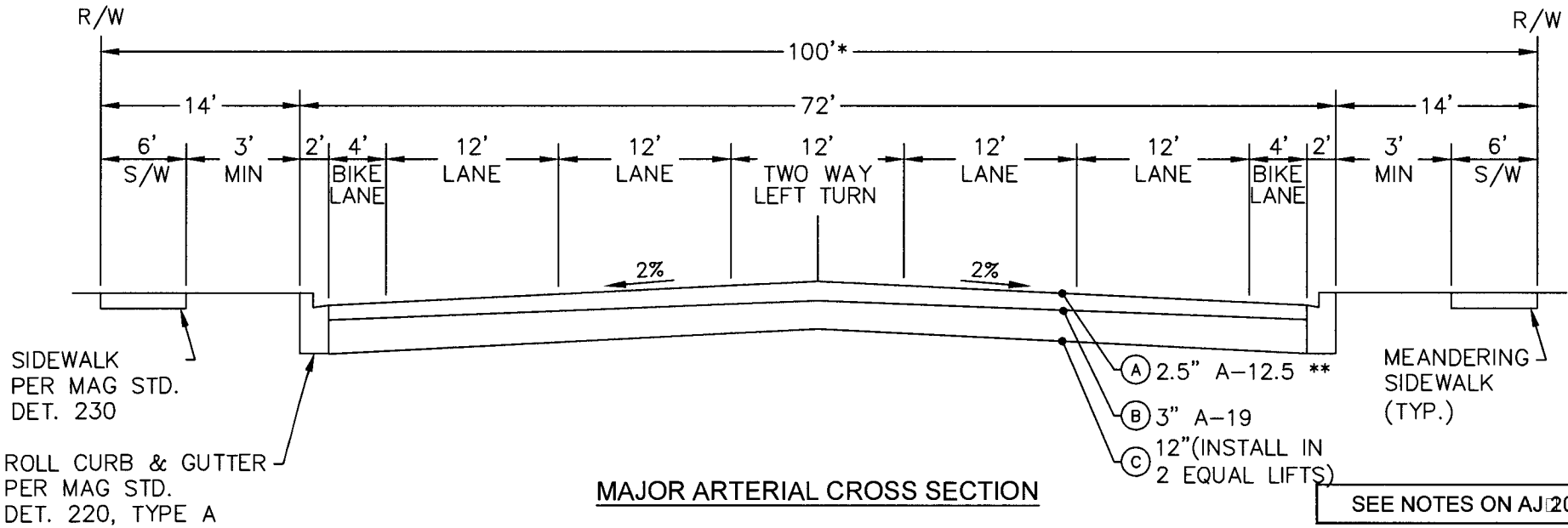

MAJOR ARTERIAL CROSS SECTION

SEE NOTES ON AJ-20.1

DETAIL NO.	CROSS SECTIONS ARTERIAL STREETS	CITY OF APACHE JUNCTION STANDARD DETAIL	DETAIL NO.
AJ-20.3			AJ-20.3

REV 12/201

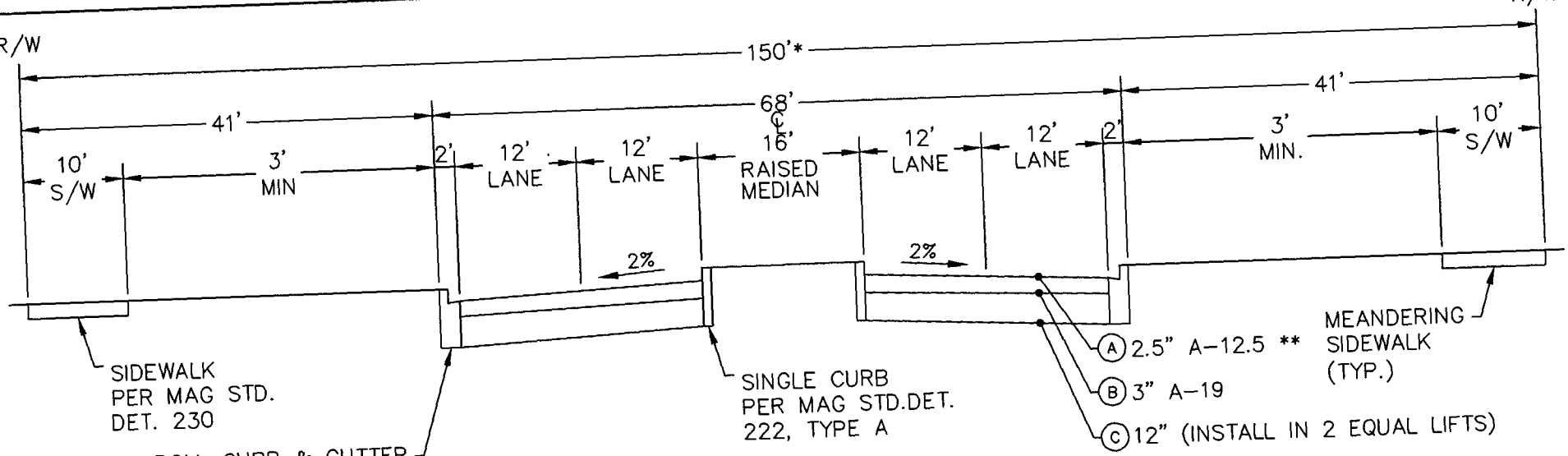

□LANE PRINCIPAL ARTERIAL CROSS SECTION

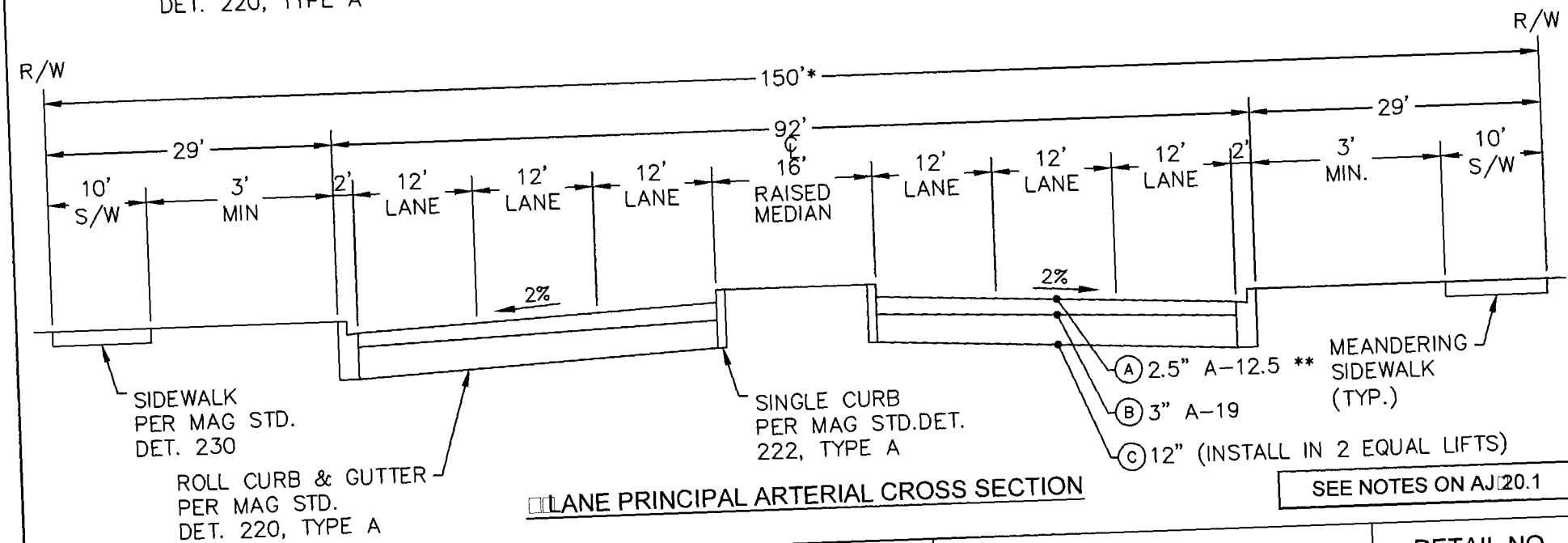

□LANE PRINCIPAL ARTERIAL CROSS SECTION

SEE NOTES ON AJ□20.1

DETAIL NO.	CROSS SECTIONS PRINCIPAL ARTERIAL STREET LOST DUTCHMAN HEI□HTS AREA	CITY OF APACHE JUNCTION STANDARD DETAIL	DETAIL NO.
AJ-20.4			AJ-20.4

REV 12/201□

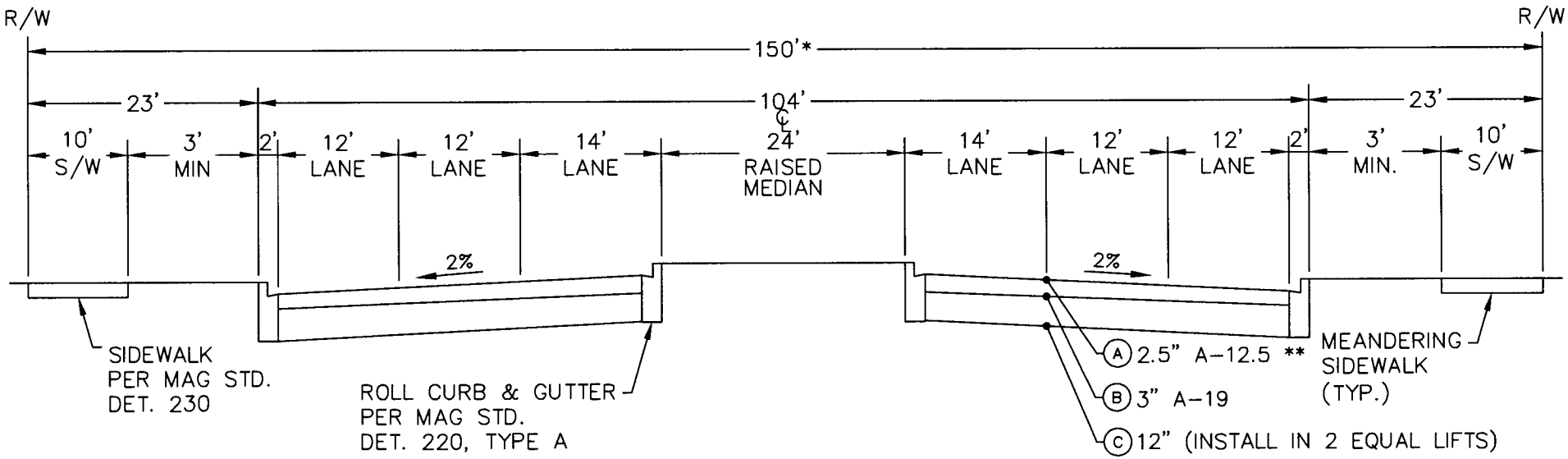

□□LANE PAR□WAY CROSS SECTION

SEE NOTES ON AJ□20.1

DETAIL NO.	CROSS SECTIONS PAR□WAY LOST DUTCHMAN HEI□HTS AREA	CITY OF APACHE JUNCTION STANDARD DETAIL	DETAIL NO.
AJ-20.5			AJ-20.5

REV 12/201□

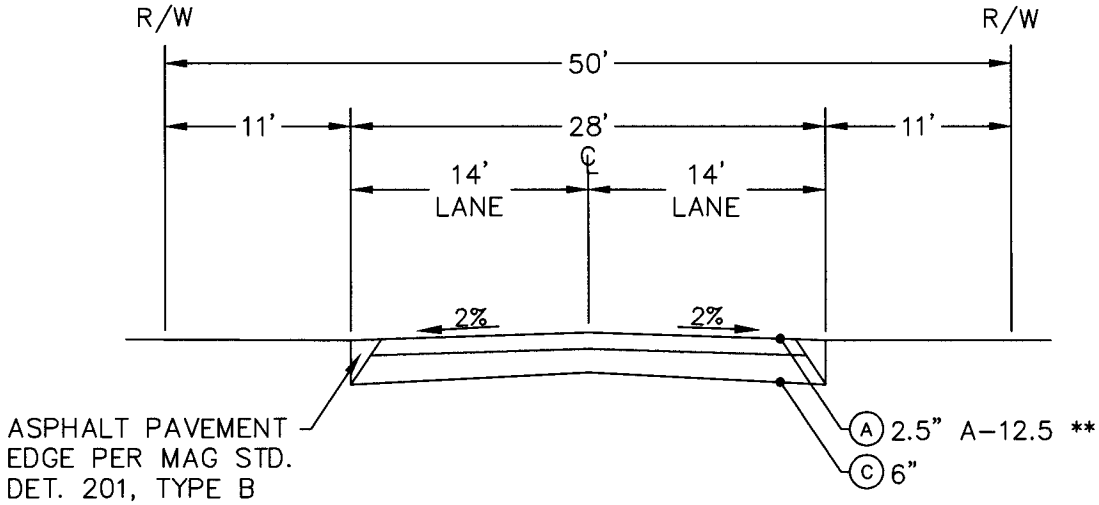

LOCAL RESIDENTIAL CROSS SECTION

FOR AREAS WITHIN THE SPECIAL
RURAL AREA□SEE APPENDI□ □

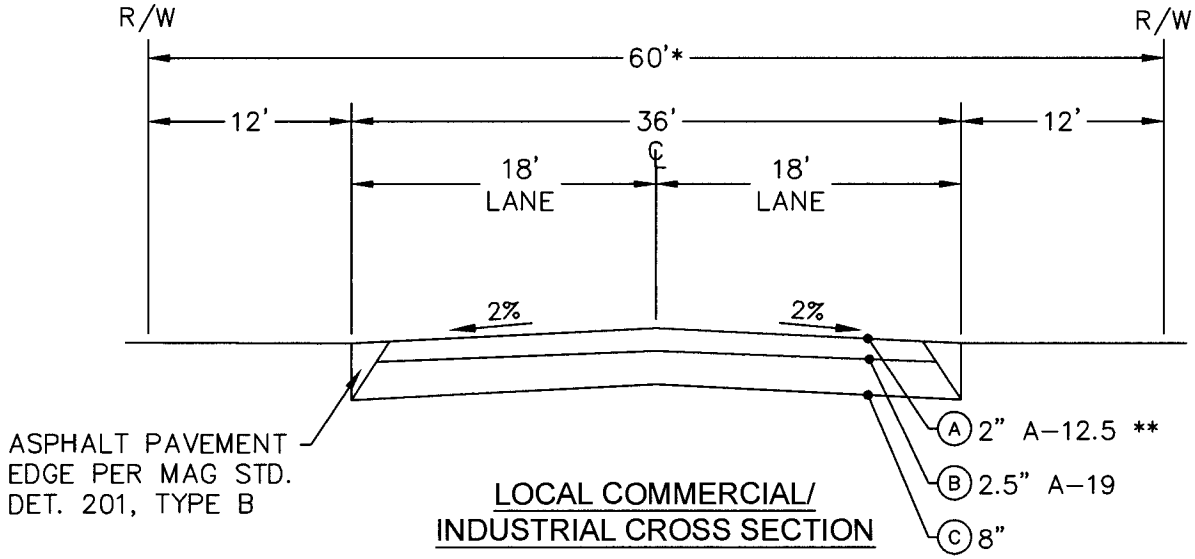

LOCAL COMMERCIAL/
INDUSTRIAL CROSS SECTION

FOR AREAS WITHIN THE SPECIAL
RURAL AREA□SEE APPENDI□ □

SEE NOTES ON AJ□20.1

DETAIL NO.	CROSS SECTIONS LOCAL STREET □RURAL AREA	CITY OF APACHE JUNCTION STANDARD DETAIL	DETAIL NO.
AJ-20.6			AJ-20.6

REV 12/201□

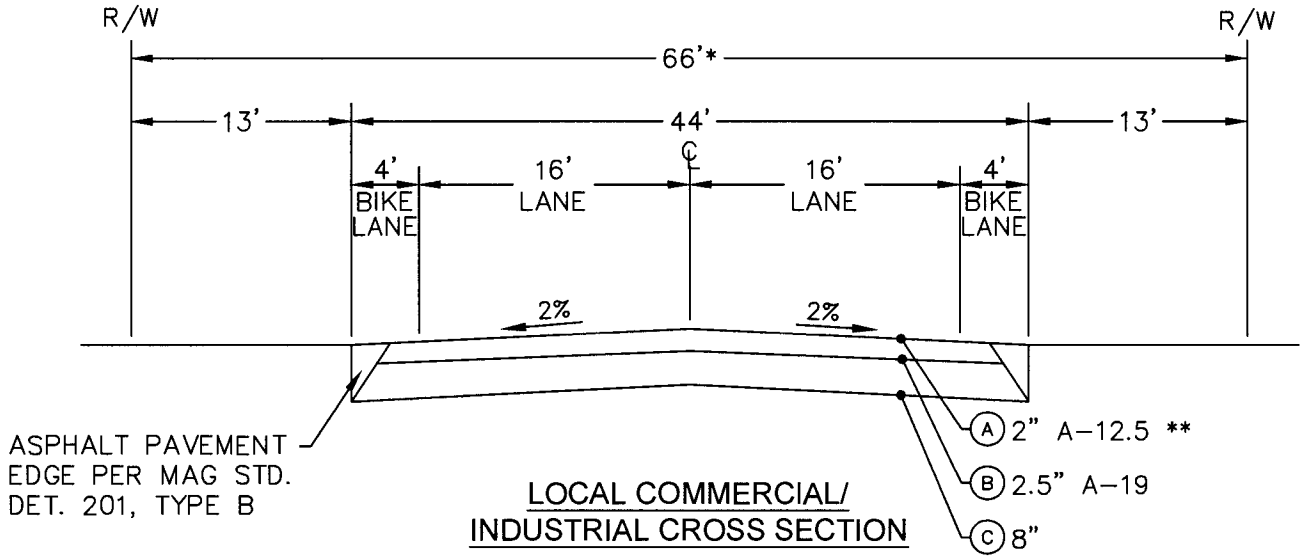

LOCAL COMMERCIAL/
INDUSTRIAL CROSS SECTION

FOR AREAS WITHIN THE SPECIAL RURAL AREA□SEE APPENDI□ □

SEE NOTES ON AJ□20.1

DETAIL NO.	CROSS SECTIONS	CITY OF APACHE JUNCTION	DETAIL NO.
AJ-20.7	COLLECTOR STREETS □RURAL AREA	STANDARD DETAIL	AJ-20.7

REV 12/201□

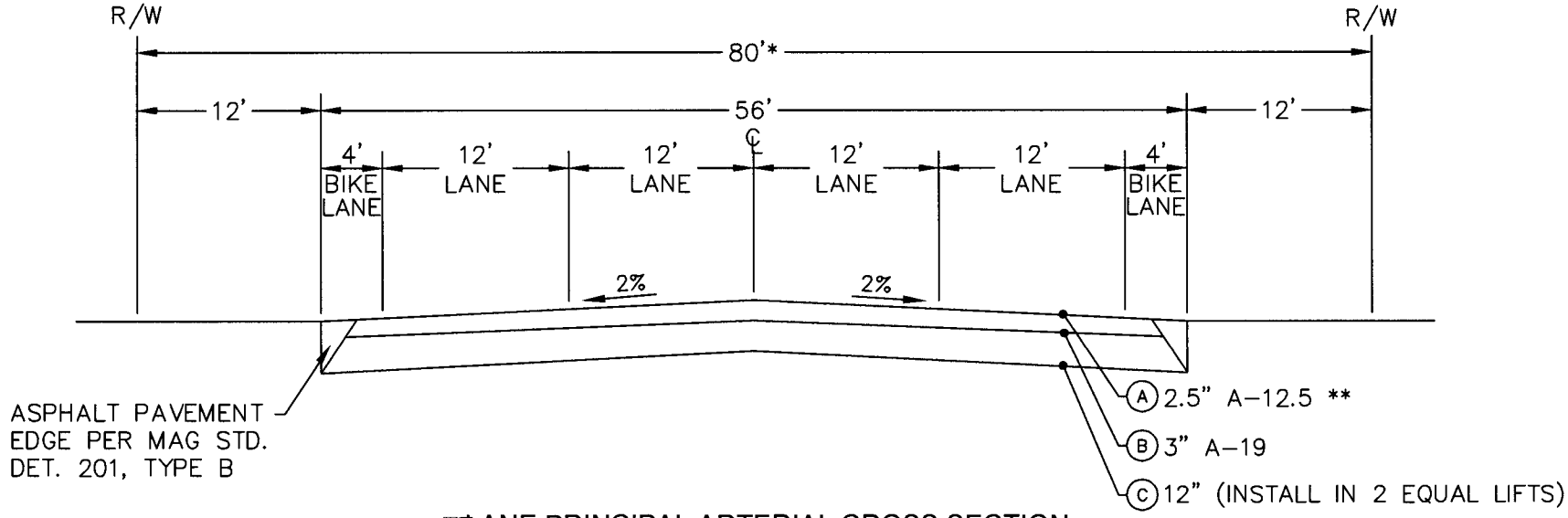

LANE PRINCIPAL ARTERIAL CROSS SECTION

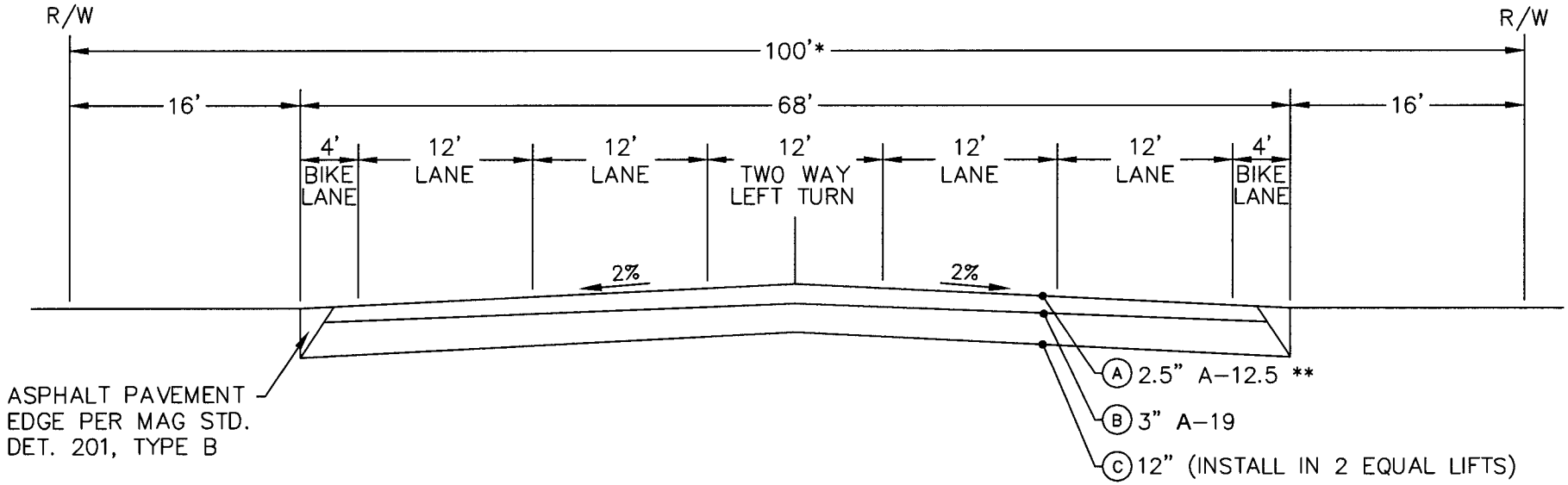

LANE PRINCIPAL ARTERIAL CROSS SECTION

SEE NOTES ON AJ 20.1

DETAIL NO.	CROSS SECTIONS ARTERIAL STREETS RURAL AREA	CITY OF APACHE JUNCTION STANDARD DETAIL	DETAIL NO.
AJ-20.8			AJ-20.8

REV 12/201

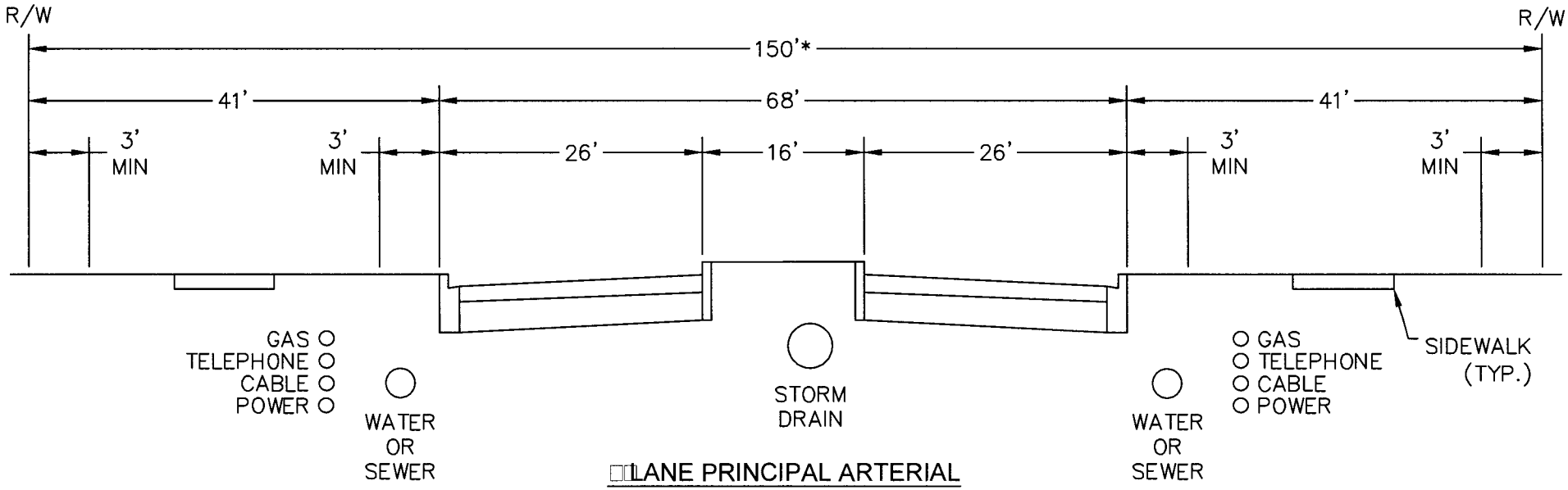

□□LANE PRINCIPAL ARTERIAL

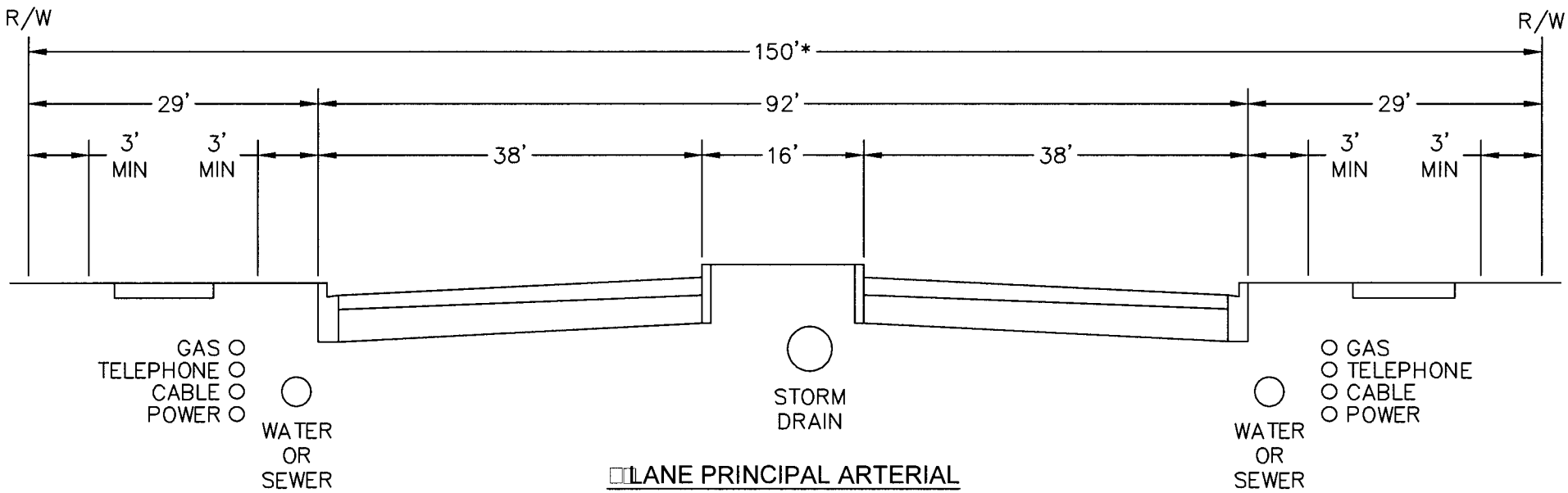

□□LANE PRINCIPAL ARTERIAL

DETAIL NO.	UTILITY LOCATIONS PRINCIPAL ARTERIAL STREET LOST DUTCHMAN HEI□HTS AREA	CITY OF APACHE JUNCTION STANDARD DETAIL	DETAIL NO.
AJ–20.9			AJ–20.9

REV 12/201□

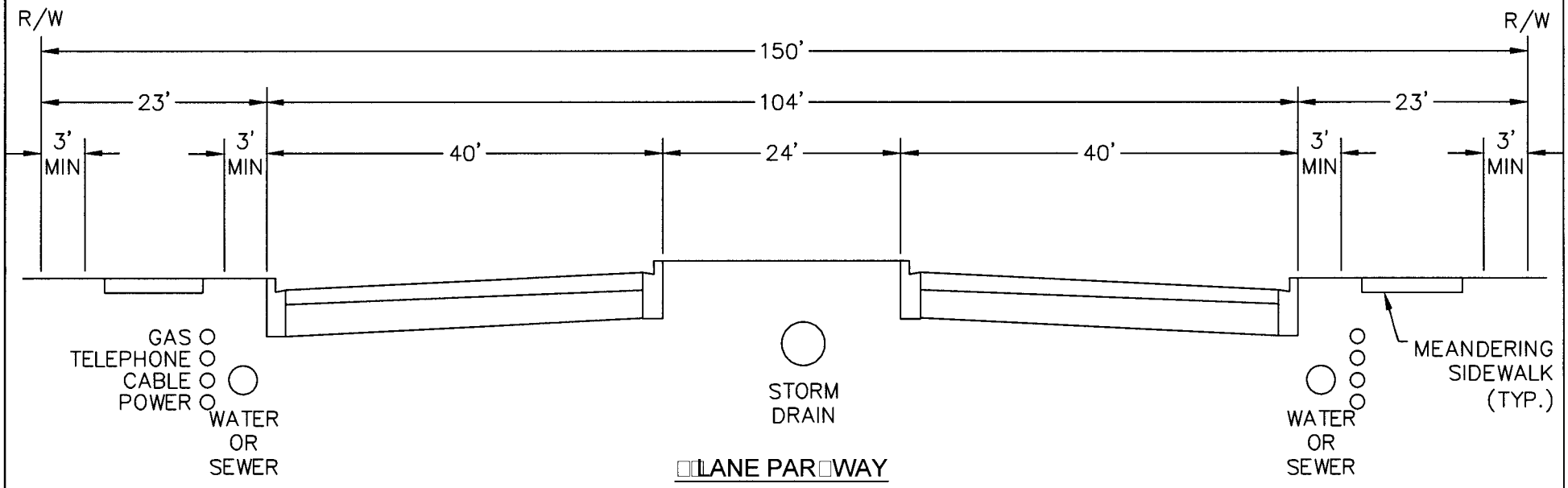

DETAIL NO.	UTILITY LOCATIONS PARKWAY LOST DUTCHMAN HEIGHTS AREA	CITY OF APACHE JUNCTION STANDARD DETAIL	DETAIL NO.
AJ-20.10			AJ-20.10

REV 12/2010

SECTION A–A
(See Detail No. AJ – 20.12)

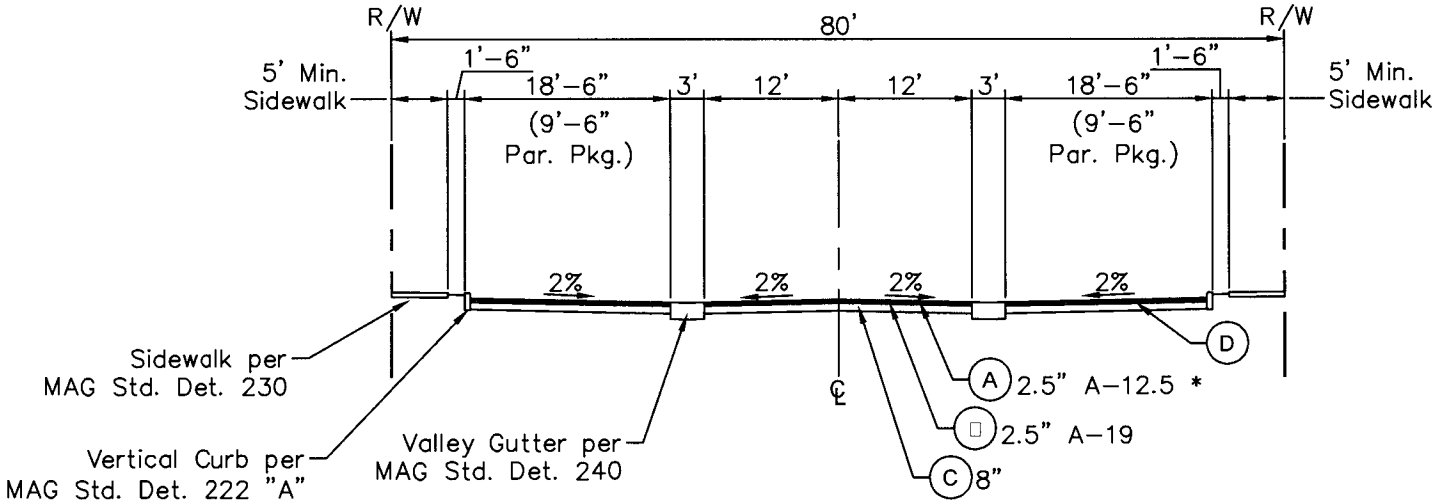

NOTES:

1. IN CASES WHERE PARALLEL PARKING WILL BE USED, THE PARKING AREA DIMENSION SHALL MEASURE 9'–6" FROM THE EDGE OF VALLEY GUTTER TO BACK OF CURB. PARALLEL PARKING STALLS SHALL BE 9' X 23'.
2. ANY PORTION OF THE PUBLIC SIDEWALK, OR AREA DESIGNATED FOR PUBLIC USE BEHIND THE RIGHT–OF–WAY LINE SHALL BE LOCATED WITHIN AN ACCESS EASEMENT.
3. SEE DOWNTOWN REDEVELOPMENT PLAN FOR HARDSCAPE INSTALLATION BETWEEN BACK OF CURB AND FACE OF BUILDING.
4. ALTERNATE UTILITY LOCATIONS TO BE

(A) ASPHALT CONCRETE SURFACE COURSE **

(B) ASPHALT CONCRETE BASE COURSE **

(C) AGGREGATE BASE COURSE PER MAG SPEC 702.2

(D) PARKING AREA SURFACE:
1. 8" DECORATIVE STAMPED CONCRETE PAVEMENT
2. 80mm INTERLOCKING PAVERS OVER 8" CONC. BASE
3. APPROVED ALTERNATE

* SURFACE TREATMENT SHALL BE GRADE SS–1H FOG SEAL IN ACCORDANCE WITH MAG SEC. 333 APPLIED AT A RATE OF 0.1 GAL/SQ. YD. OR AS OTHERWISE DIRECTED BY THE CITY ENGINEER.

** ASPHALT CONCRETE SHALL CONFORM TO THE EAST VALLEY ASPHALT CRITERIA, 1996 EDITION AND BE APPROVED BY THE EVA COMMITTEE.

DETAIL NO.	CROSS SECTION "MAIN STREET"	CITY OF APACHE JUNCTION STANDARD DETAIL	DETAIL NO.
AJ–20.11			AJ–20.11

REV 12/2015

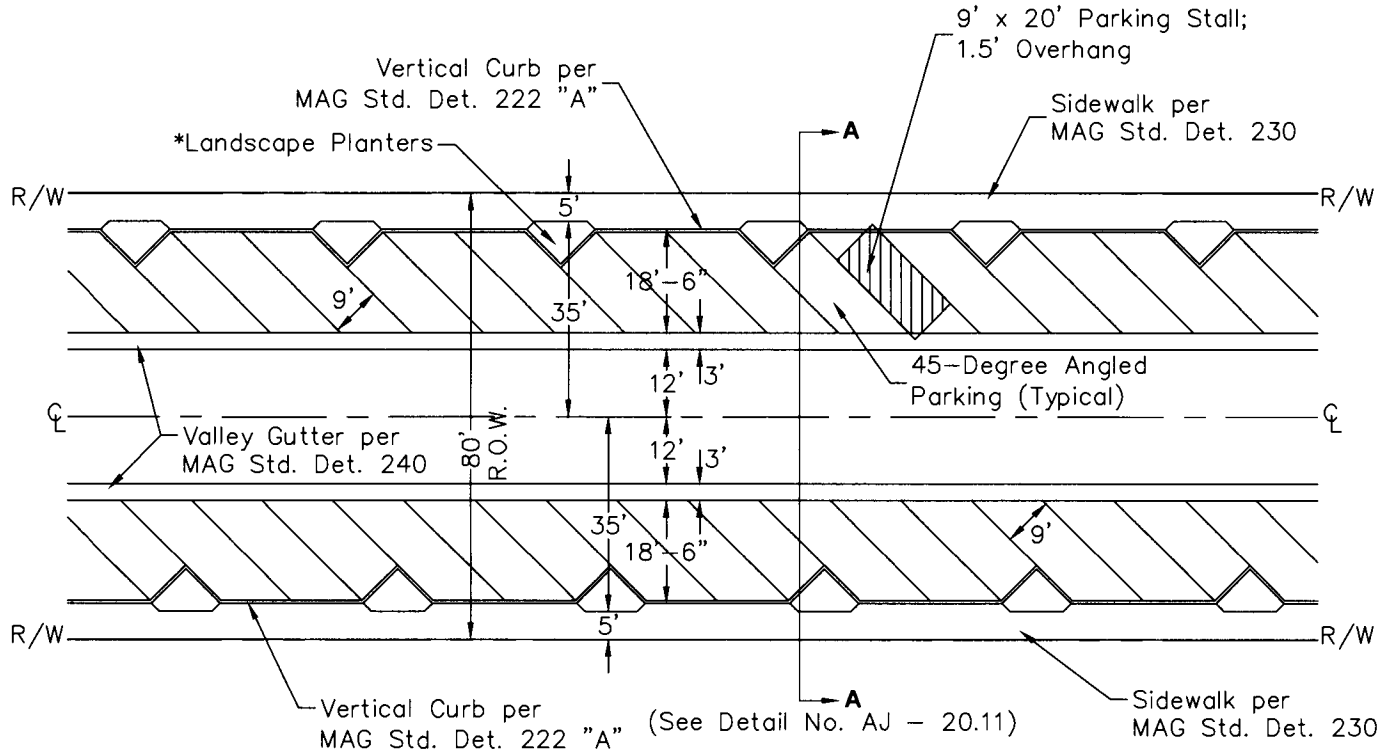

*Typical per Downtown Redevelopment Plan

NOTES:

1. DRIVEWAY PLACEMENT PER CITY STANDARDS. LOCATIONS TO BE REVIEWED AND APPROVED BY CITY ENGINEER.

2. STREET LIGHTS TO BE INSTALLED PER DOWNTOWN REDEVELOPMENT PLAN

DETAIL NO.	PLAN VIEW "MAIN STREET"	CITY OF APACHE JUNCTION STANDARD DETAIL	DETAIL NO.
AJ-20.12			AJ-20.12

REV 12/2015

□□LANE PRINCIPAL ARTERIAL
□□LANE PRINCIPAL ARTERIAL
PAR□WAY

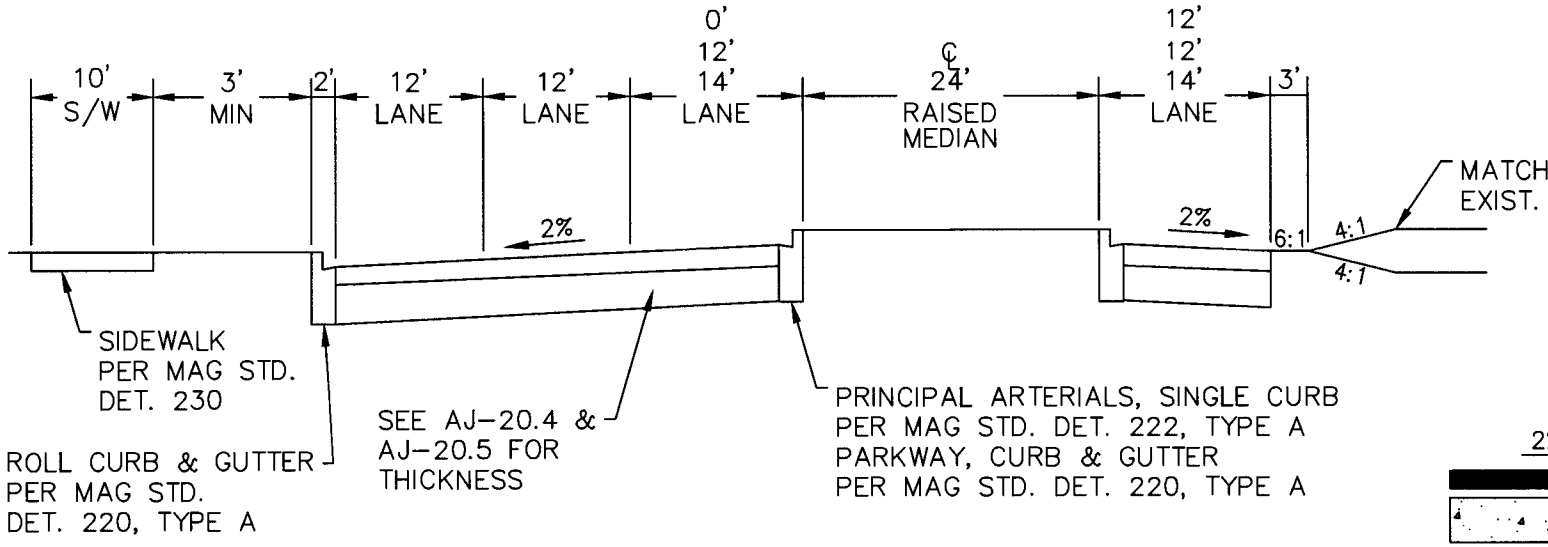

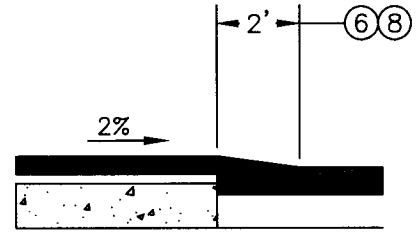

NEW

MATCH E□ISTIN□ PAVEMENT

1. THIC□ENED ED□E PER MA□ STD. DET. 201□TYPE □.
2. SAWCUT E□ISTIN□ PAVEMENT AS RE□UIRED □Y FIELD INSPECTOR. MATCH□NEW PAVEMENT TO E□ISTIN□ □UTT JOINT.
□. ALL STREETS TO □E CONSTRUCTED WITH STRAI□HT CROWN OF 0.02 FT/FT.
□. WHERE 12" A□C IS RE□UIRED□IT IS TO □E INSTALLED IN TWO □2□E□UAL LAYERS.
5. NEW PAVEMENT AMY RE□UIRE A□C FILL OVER E□ISTIN□ PAVEMENT TO □RIN□ NEW ROADWAY TO □RADE.
□. TWO□FOOT MIN. TRANSITION WILL APPLY TO ALL LOCAL□ COLLECTOR□ARTERIAL□AND PAR□WAY STREETS. ALL TRANSITIONS SHALL □E □UTT JOINT.
□. PLACE NEW SURFACE □ □ASE PAVEMENT OVER E□ISTIN□ PAVEMENT. □SEE AJ□20.1 □ AJ□20.□ FOR MIN. THIC□NESS□.
□. WHEN THE ELEVATION OF THE NEW □ASE ASPHALT DOES NOT MATCH□THE E□ISTIN□ ASPHALT AND/OR A□ □RE□ATE □ASE SHALL □E SAWCUT□REMOVED AND REPLACED AS DIRECTED □Y THE CITY□S INSPECTOR TO CREATE A SMOOTH TRANSITION.

DETAIL NO.	CROSS SECTIONS PARTIAL PRINCIPAL ARTERIAL/ PAR□WAY STREET	CITY OF APACHE JUNCTION STANDARD DETAIL	DETAIL NO.
AJ-21.4			AJ-21.4

REV 12/201□

STREET NAME SI□NS

ASTM TYPE□IV SHEETIN□
COLOR□ WHITE ON □REEN □PU□LIC□
WHITE ON □LUE □PRIVATE□
FONT□ HI□HWAY □OTHIC MOD C □FED □ERN□
□LAN□ SI□ES□ □"□□□"□□"□□2"□□"□□□"□□r □"□5□"
LEN□TH DEPENDS ON THE STREET NAME
□LAN□ TYPE□ 0.0□0 INCHES E□TRUDED ALUMINUM

STREET NAME SHALL □E A MINIMUM OF □" IN HEI□HT AND POSITIONED TO THE LEFT

TYPE OF STREET □RD□ST□AVE□ETC.□□ DIRECTIONAL ARROW SHALL □E POSITIONED IN THE UPPER RI□HT CORNER

□LOC□ NUM□ER DESI□NATIONS SHALL □E POSITIONED LOWER RI□HT CORNER

A ½" WHITE □ORDER SHALL □E PLACED AROUND ALL SIDES

DIMENSIONS □INCHES□

STREET TYPE	A	□	C
MAJOR ARTERIAL	□	□	□
MINOR ARTERIAL	□	□	□
COLLECTOR	□	□	2.5
LOCAL	□	□	2.5

DETAIL NO.	STREET SI□N	CITY OF APACHE JUNCTION STANDARD DETAIL	DETAIL NO.
AJ–28.1			AJ–28.1

REV 12/201□

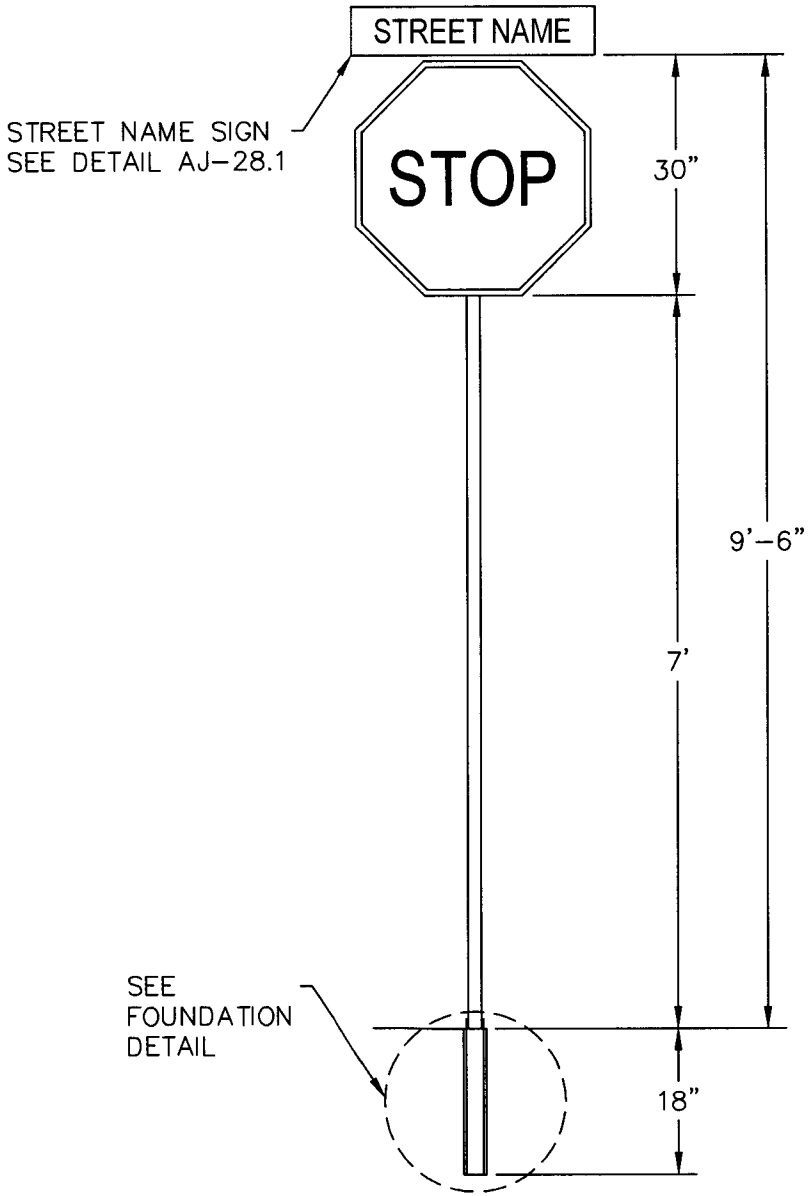

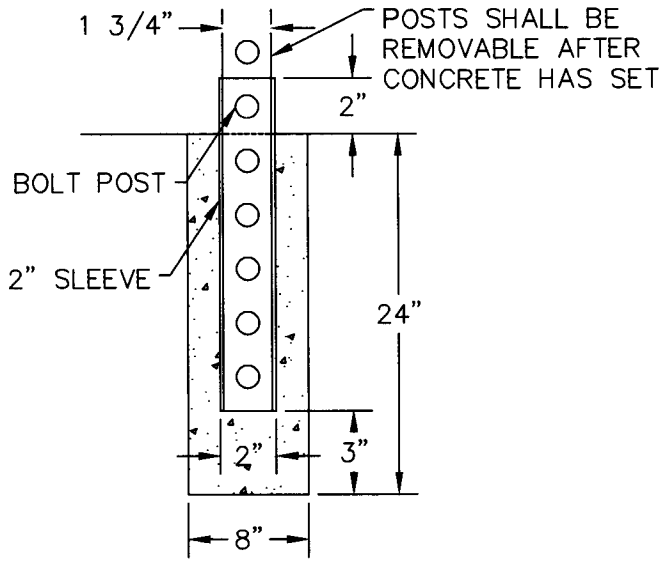

FOUNDATION DETAIL

NOTES□

STREET NAME SI□N AND STOP SI□N MOUNTIN□ HEI□HT SHALL □E MEASURED FROM TOP OF SIDEWAL□□TOP OF CUR□□OR TOP OF NEAREST PAVEMENT.

WHEN NO STOP SI□N IS RE□UIRED□THE STREET NAME SI□N IS MOUNTED AT □□□".

WHEN TWO STREET NAME SI□NS ARE MOUNTED ONE ON TOP OF THE OTHER□THE HEI□HT IS MEASURED TO THE □OTTOM OF THE SI□N.

POST SHALL □E MADE OUT OF □ALVANI□ED STEEL AND HAVE □/1□" DIA PERFORATED HOLES SPACED AT 1" CENTER TO CENTER ON ALL FOUR SIDES.

SLEEVE SHALL □E COVERED TO PREVENT CONCRETE FROM ENTERIN□ HOLES.

DETAIL NO.	STREET SI□N INSTALLATION	CITY OF APACHE JUNCTION STANDARD DETAIL	DETAIL NO.
AJ-28.2			AJ-28.2

REV 12/201□

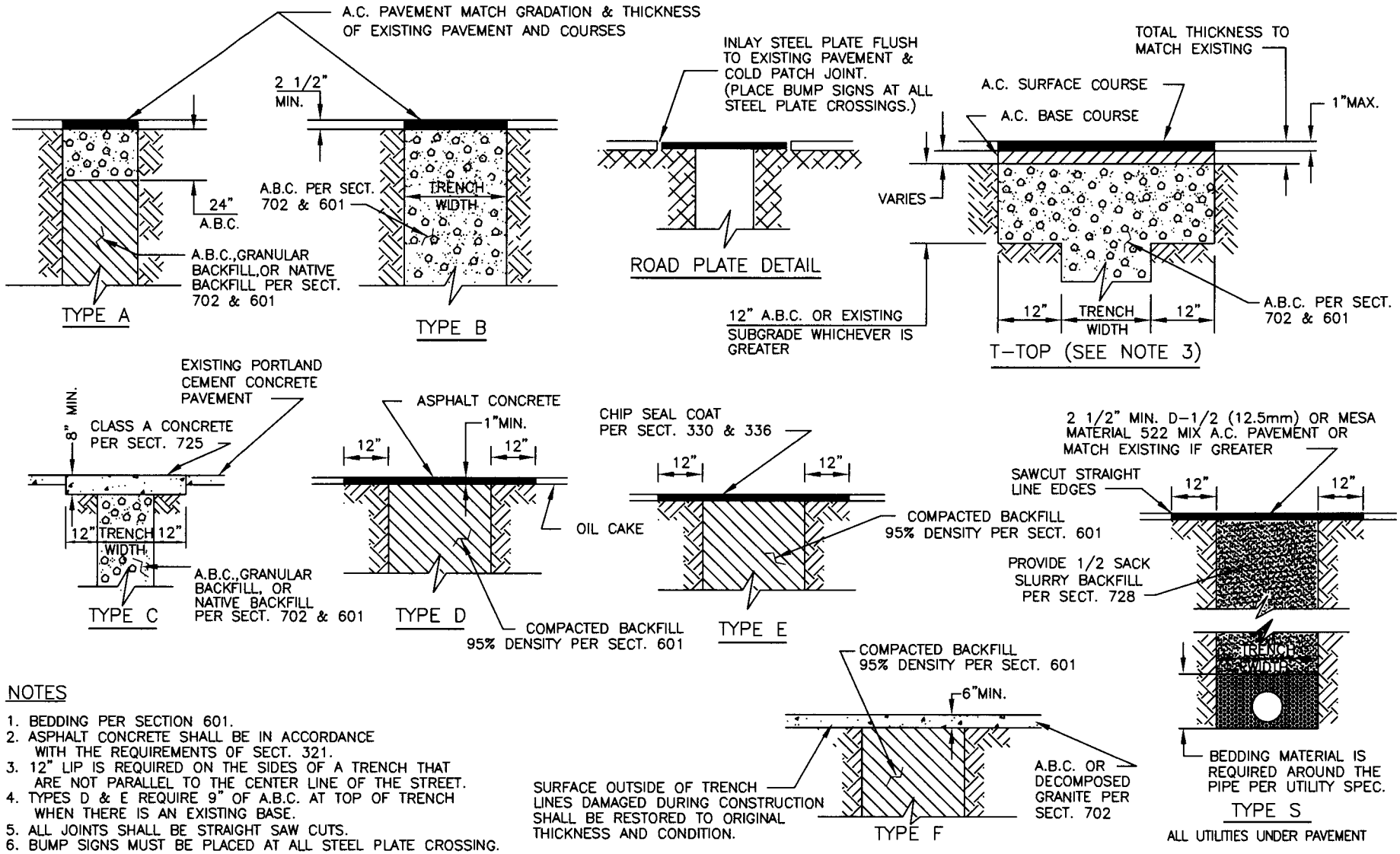

NOTES

1. BEDDING PER SECTION 601.
2. ASPHALT CONCRETE SHALL BE IN ACCORDANCE WITH THE REQUIREMENTS OF SECT. 321.
3. 12" LIP IS REQUIRED ON THE SIDES OF A TRENCH THAT ARE NOT PARALLEL TO THE CENTER LINE OF THE STREET.
4. TYPES D & E REQUIRE 9" OF A.B.C. AT TOP OF TRENCH WHEN THERE IS AN EXISTING BASE.
5. ALL JOINTS SHALL BE STRAIGHT SAW CUTS.
6. BUMP SIGNS MUST BE PLACED AT ALL STEEL PLATE CROSSING.
7. SLURRY ALL TRENCHES UNDER PAVEMENT & WASH CROSSINGS

DETAIL NO. AJ-200M	BACKFILL, PAVEMENT & SURFACE REPLACEMENT	CITY OF APACHE JUNCTION STANDARD DETAIL REVISED OCTOBER 2006

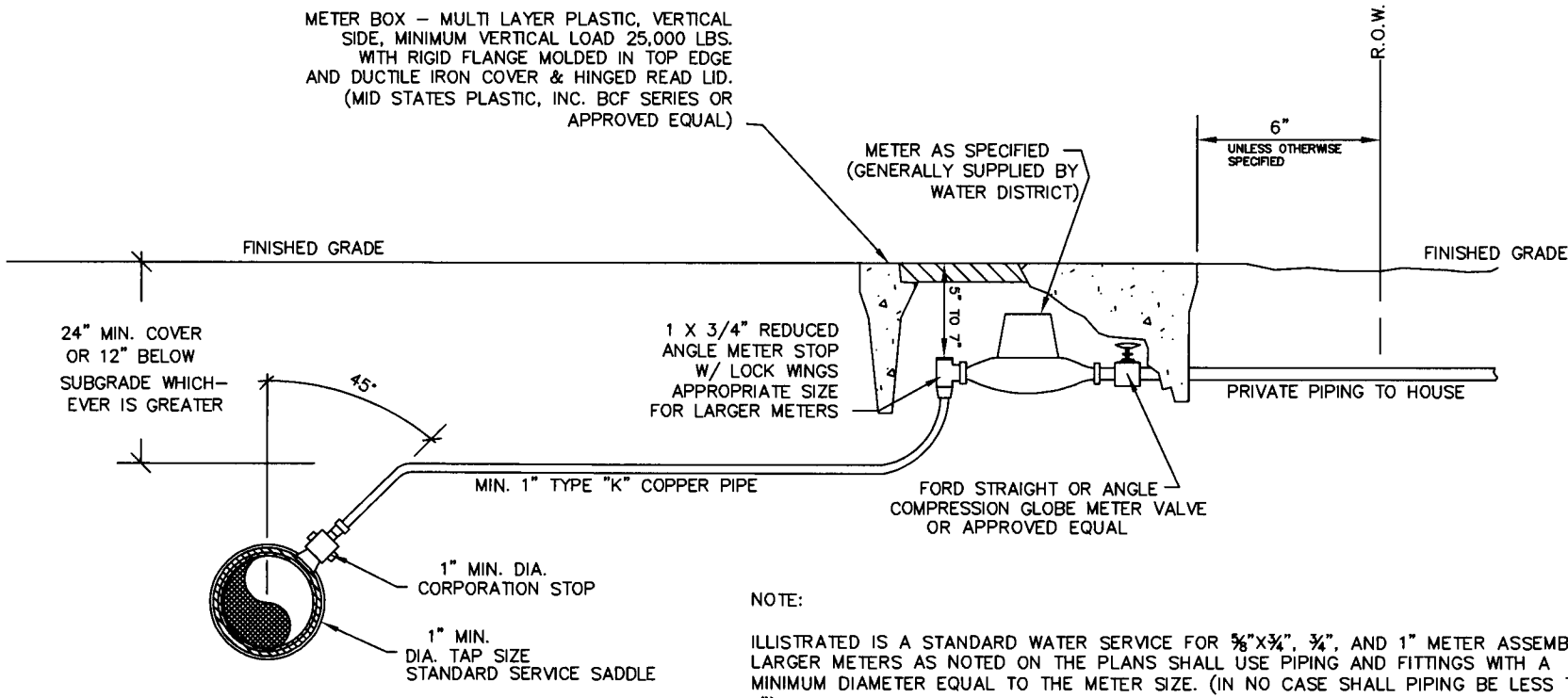

NOTE:

ILLISTRATED IS A STANDARD WATER SERVICE FOR ⅝"X¾", ¾", AND 1" METER ASSEMBLIES. LARGER METERS AS NOTED ON THE PLANS SHALL USE PIPING AND FITTINGS WITH A MINIMUM DIAMETER EQUAL TO THE METER SIZE. (IN NO CASE SHALL PIPING BE LESS THAN 1")

METER BOXES SHALL BE PLACED AT AN ELEVATION EQUAL TO THE FINISH GRADE INCLUDING LANDSCAPING EXCEPT IN ALLEYS. METER BOXES IN ALLEYS SAHLL BE SET AT AN ELEVATION 2" ABOVE FINISH GRADE.

CITY OF APACHE JUNCTION ARIZONA

APPROVED

CITY ENGINEER DATE

CITY OF APACHE JUNCTION	
3/4" TO 2" WATER METER SETTING DETAIL	
JULY 2005	DRAWING NO. AJW – 101

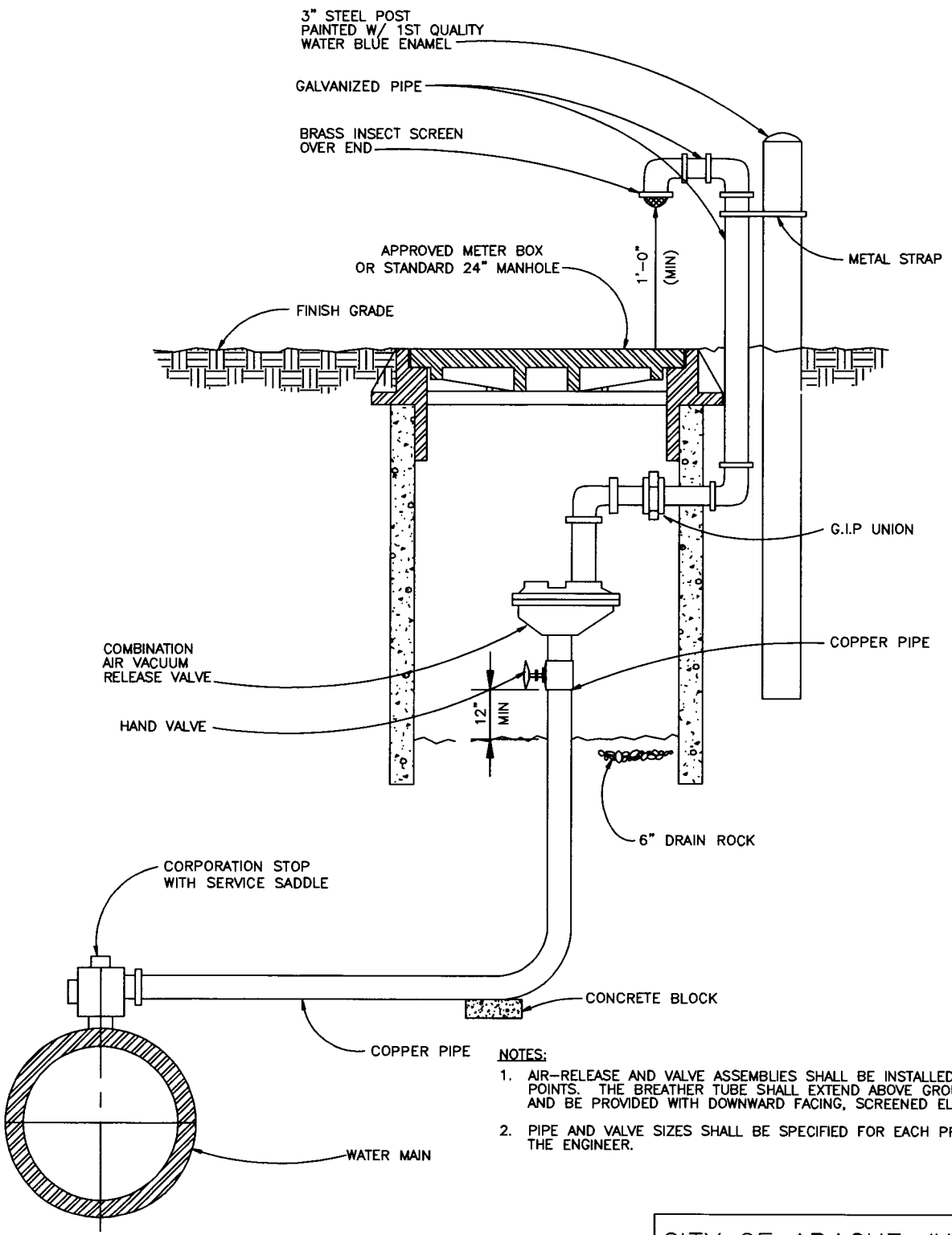

NOTES:

1. AIR-RELEASE AND VALVE ASSEMBLIES SHALL BE INSTALLED AT HIGH POINTS. THE BREATHER TUBE SHALL EXTEND ABOVE GROUND LEVEL AND BE PROVIDED WITH DOWNWARD FACING, SCREENED ELBOW.
2. PIPE AND VALVE SIZES SHALL BE SPECIFIED FOR EACH PROJECT BY THE ENGINEER.

CITY OF APACHE JUNCTION ARIZONA

APPROVED

CITY ENGINEER DATE

CITY OF APACHE JUNCTION

COMBINATION AIR-RELEASE VALVE ASSEMBLY 2" AND SMALLER

JULY 2005

DRAWING NO. AJW - 102

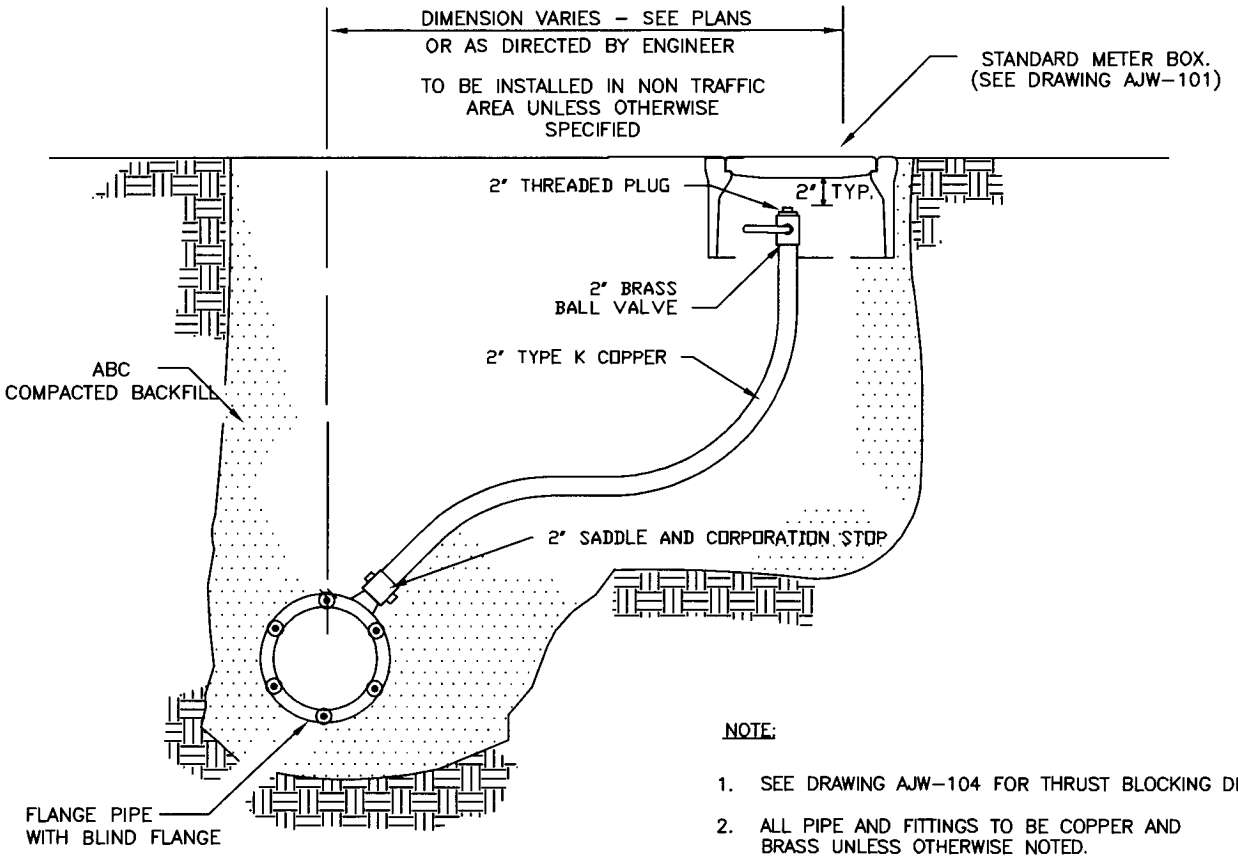

NOTE:

1. SEE DRAWING AJW–104 FOR THRUST BLOCKING DETAILS.
2. ALL PIPE AND FITTINGS TO BE COPPER AND BRASS UNLESS OTHERWISE NOTED.

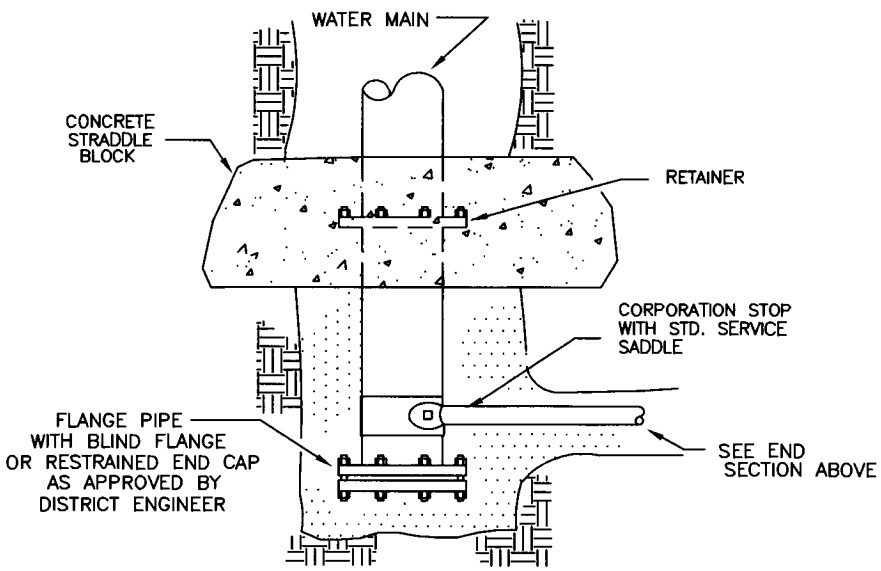

TOP VIEW

CITY OF APACHE JUNCTION ARIZONA

APPROVED

CITY ENGINEER DATE

CITY OF APACHE JUNCTION

TYPICAL MAIN
DEAD–END BLOWOFF
ASSEMBLY

JULY 2005

DRAWING NO.
AJW – 103

NOTES:

1. VALVE BOX NOT TO REST ON OPERATING ASSEMBLY.
2. OPERATOR EXTENSION REQUIRED WHEN VALVE NUT IS DEEPER THAN 4 FEET FROM FINISH GRADE. NUT SHALL BE 30" MIN. FROM FINISH GRADE. EXTENSION MAY BE COMMERCIALLY MANUFACTURED OR FIELD FABRICATED USING STANDARDS BELOW, AS APPROVED BY DISTRICT ENGINEER.
3. CENTER VALVE BOX ON AXIS OF OPERATOR NUT.
4. VALVES 12" AND SMALLER SHALL BE PROVIDED WITH ENGINEER APPROVED BASE ON UNDISTURBED GROUND. VALVES GREATER THAN 12" SHALL BE INSTALLED ON PRECAST CONCRETE PIER BLOCK. PIER BLOCKS REQUIRED ON ALL PVC LINES.
5. OPERATING NUT EXTENSION TO BE HOT DIPPED GALVANIZED AFTER FABRICATION.
6. VALVE BOX LUGS SHALL BE ALIGNED PARALLEL TO THE MAIN IT REGULATES.
7. VALVE BOXES SHALL BE CLEAR OF ROCKS AND OTHER DEBRIS.

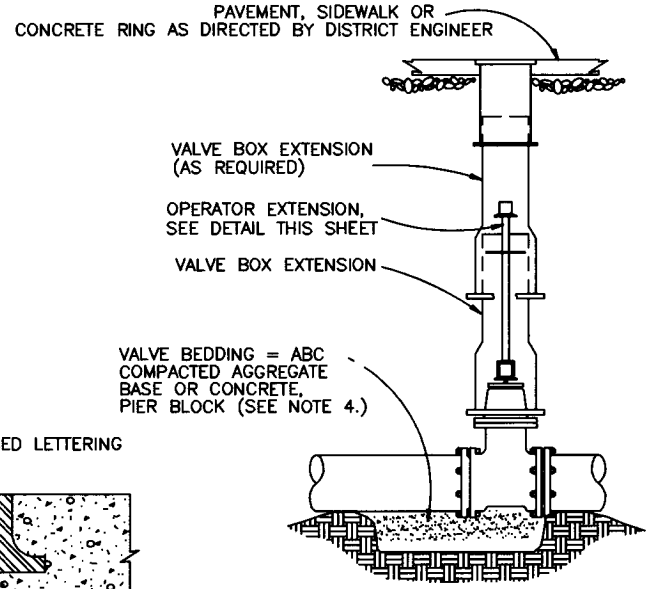

VALVE BOX ASSEMBLY DETAIL

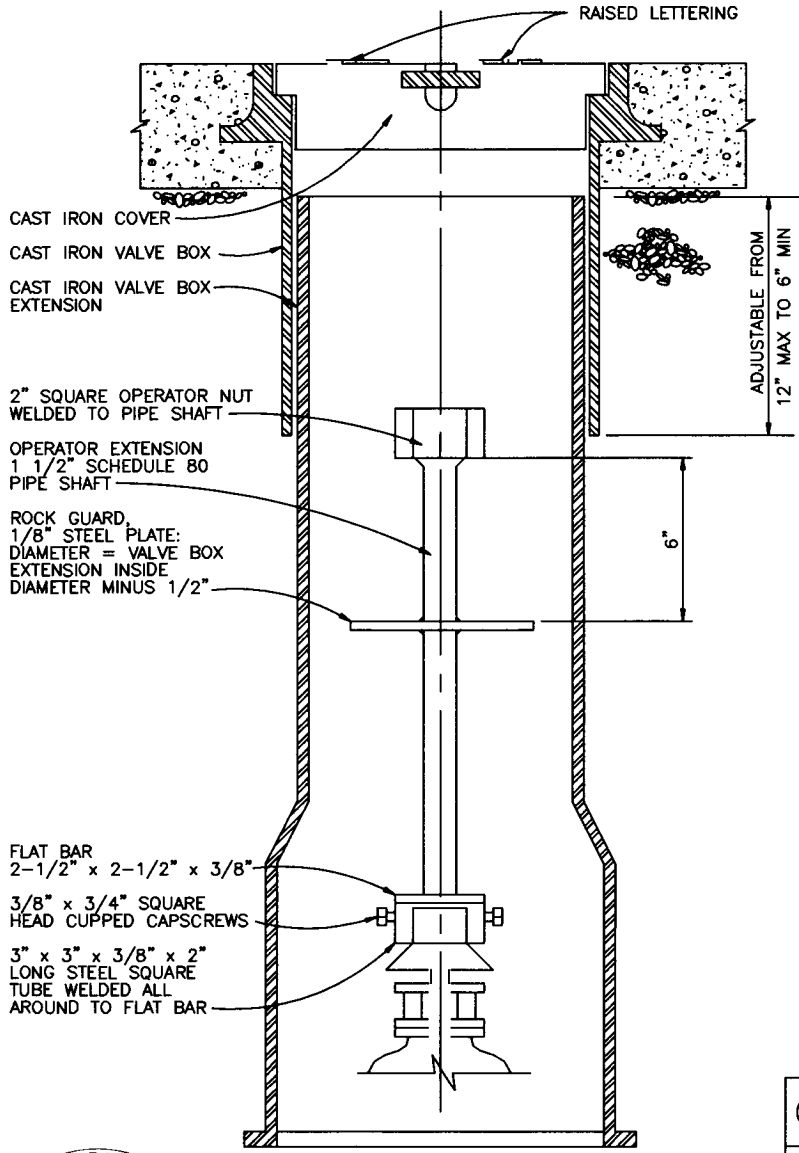

VALVE BOX EXTENSION SECTION

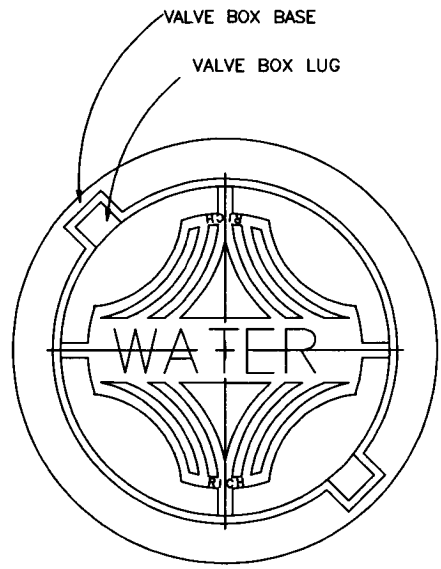

TYPICAL COVER PLAN

CITY OF APACHE JUNCTION ARIZONA

APPROVED

CITY ENGINEER DATE

CITY OF APACHE JUNCTION	
VALVE BOX AND OPERATOR EXTENSION ASSEMBLY	
JULY 2005	DRAWING NO. AJW – 106

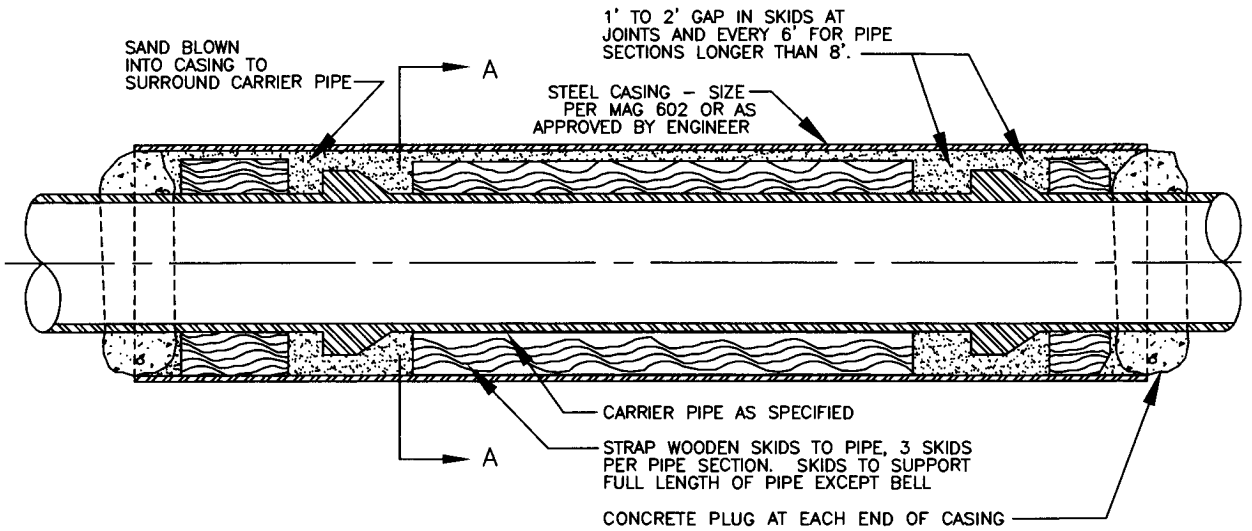

NOTE: MANUFACTURED CASING SPACERS MAY BE SUBSTITUTED
FOR WOODEN SKIDS AS APPROVED BY DISTRICT ENGINEER

PLAN

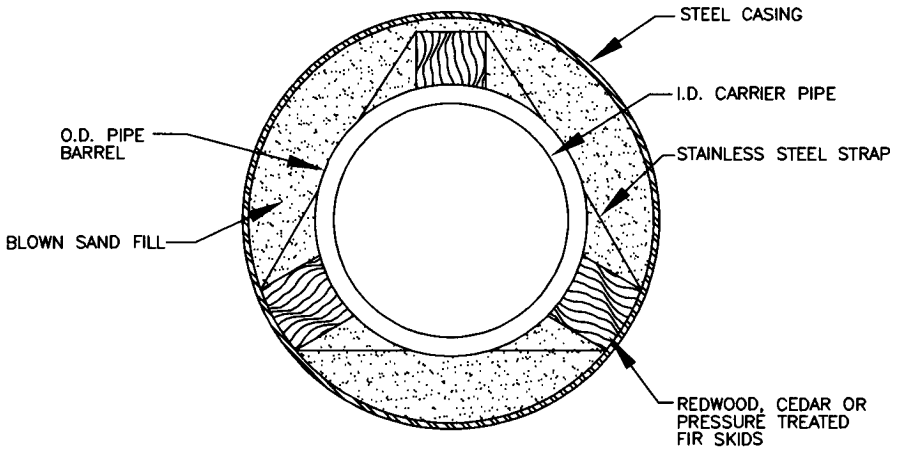

SECTION A–A

NOTES:

1. BORE CASING DESIGNS TO BE APPROVED BY CITY ENGINEER.

CITY OF APACHE JUNCTION ARIZONA

APPROVED

CITY ENGINEER DATE

CITY OF APACHE JUNCTION	
BORE CASING DETAIL	
FEBRUARY 2004	DRAWING NO. AJW – 120